Printout

Friday, February 22, 2019 10:32 AM

Announcements

- Quiz 3 continues
- Thank you for your feedbacks

- Upcoming deadlines:
- Friday (2/22) – TODAY!
  - Written Assignment
- Tuesday (2/26)
  - PL HW

1

Objectives

- Structural analysis – Truss
  - Truss members in tension and compression
  - Method of joints

2

Friday, February 22, 2019 10:32 AM

Chapter 6: Structural Analysis

Simple trusses

Trusses are commonly used to support roofs.

A more challenging question is, that for a given load, how can we design the trusses' geometry to minimize cost?

4

Scaffolding

An understanding of statics is critical for predicting and analyzing possible modes of failure.

Buckling of slender members in compression is always a consideration in structural analysis.

5

Simple trusses

Truss:

- Structure composed of slender members joined together at end points
- Transmit loads to supports

Assumption of trusses

- Loading applied at joints, with negligible weight. Members joined by smooth pins

Result: all truss members are

2-force member

and therefore the force acting at the end of each member will be directed along the axis of the member

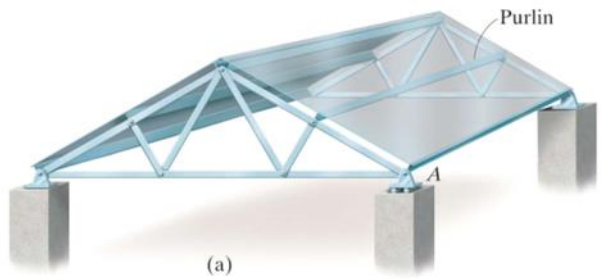

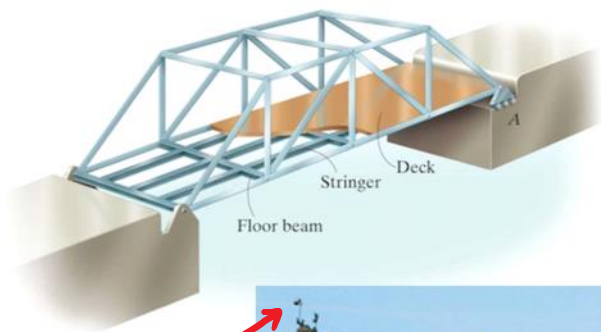

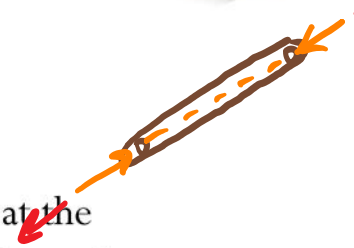

6

Roof trusses

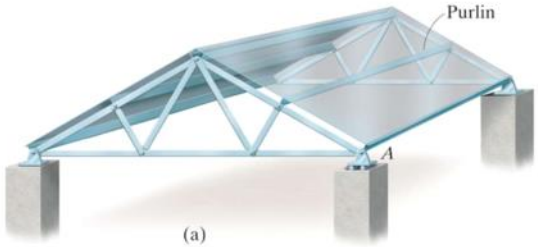

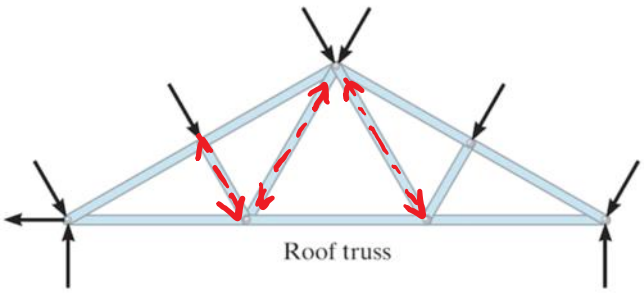

Load on roof transmitted to purlins, and from purlins to roof trusses at joints.

Bridge trusses

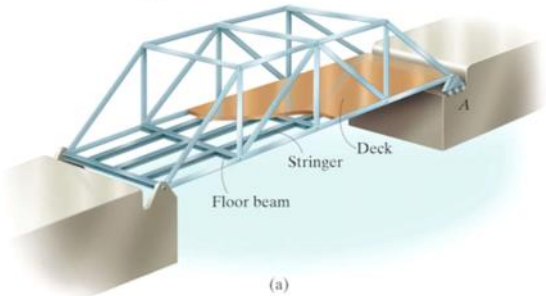

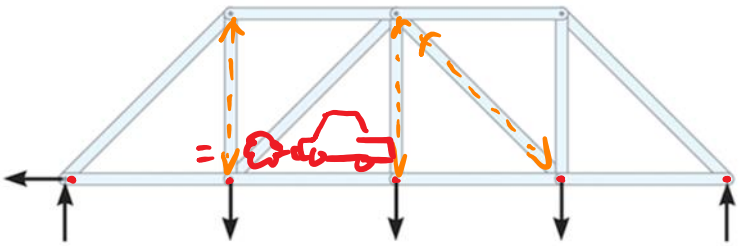

Load on deck transmitted to stringers, and from stringers to floor beams, and from floor beams to bridge trusses at joints.

7

Truss joints

- Bolting or welding of the ends of the members to a gusset plates or passing a large bolt through each of the members
- Properly aligned gusset plates equivalent to pins (i.e., no moments) from coplanar, concurrent forces
- Simple trusses built from triangular members

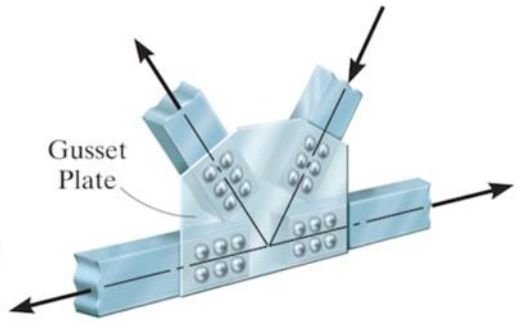

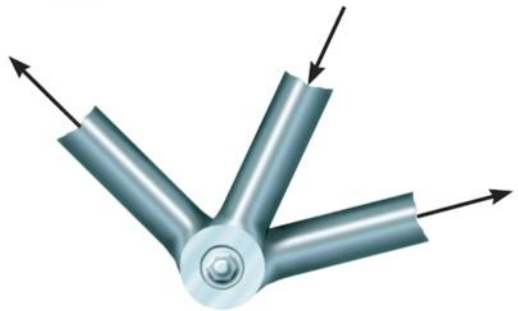

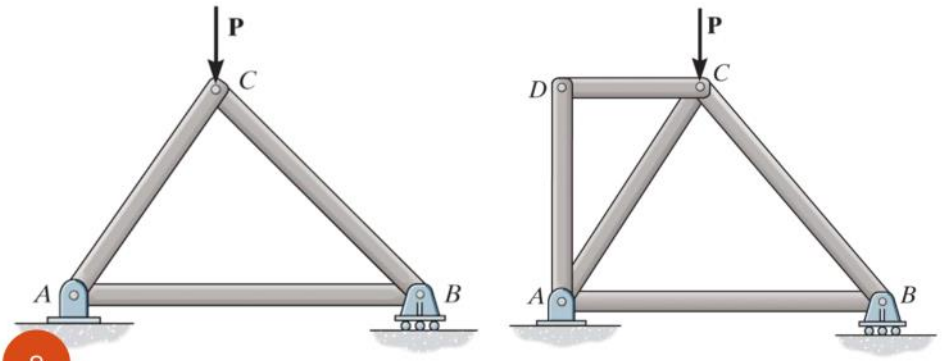

← idealize.

8

· Distinguish between compression & tension.

Method of joints

- Truss is in equilibrium ONLY if ALL individual pieces are in equilibrium
- Truss members are two-force members: equilibrium satisfied by equal, opposite, collinear forces

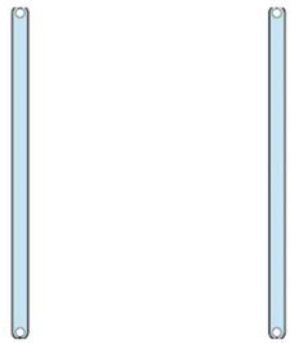

Procedure for analysis:

1. Draw a FBD of the whole truss and find the external reactions at the supports.
2. Draw a FBD of a joint with at least one known force and at most two unknown forces.
3. Use equations of equilibrium for the joint to solve for the unknown forces.
4. Repeat the process for finding forces in truss members of interest.

Remember, members in *compression* "pushes" back on the pin joints, and members in *tension* "pulls" back on the pin joints.

9

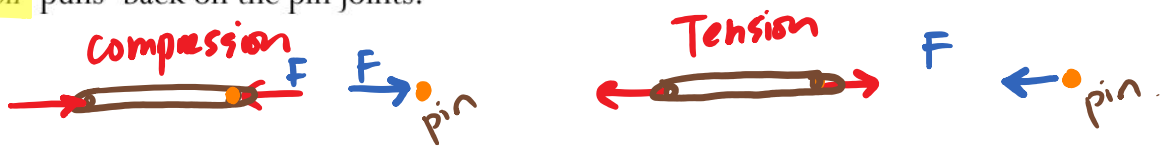

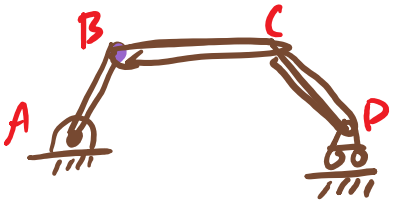

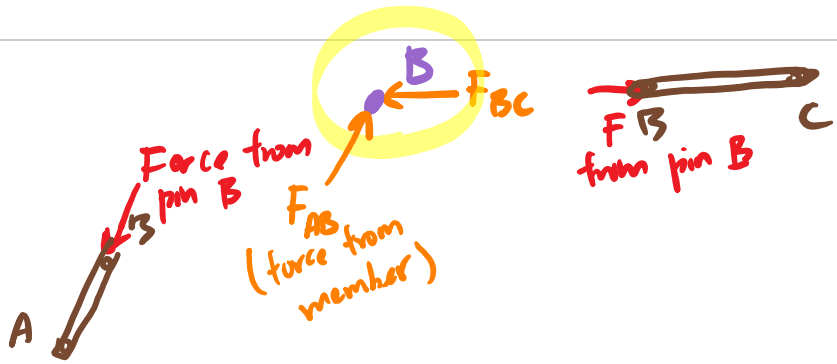

Applied on pins directly

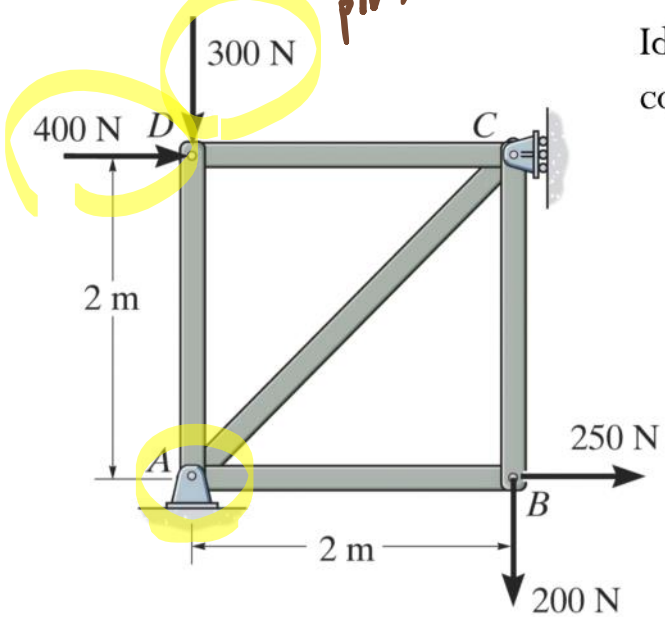

Identify the number of force components acting on pins A and B.

Pin A FBD

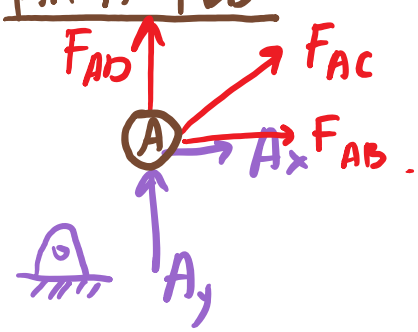

- Assume unknown direction to be tension. (+)
- 5 force components on A.
- 4 force components on B.

Pin B FBD

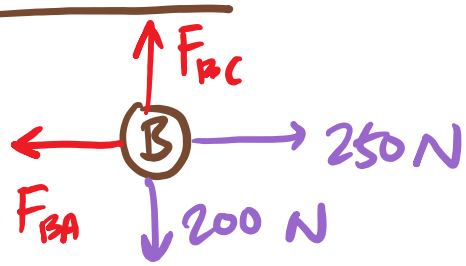

10

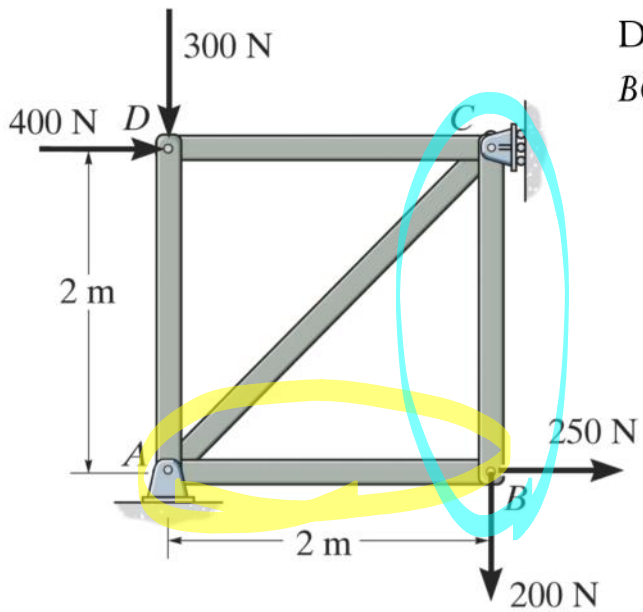

Determine whether members AB and BC are in tension or compression.

Pin B FBD

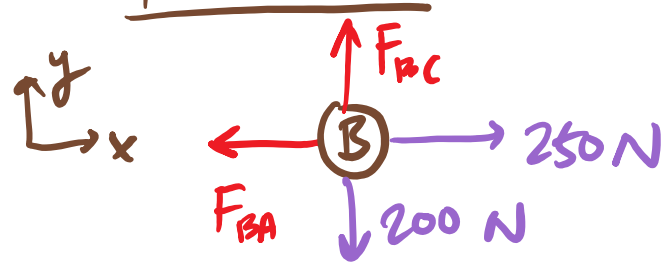

$\Sigma F_y = F_{BC} - 200\,N = 0$

$F_{BC} = +200\,N$

- also in tension.

$\Sigma F_x = -F_{BA} + 250N = 0$

$F_{BA} = +250N$

- the member is in tension.

12

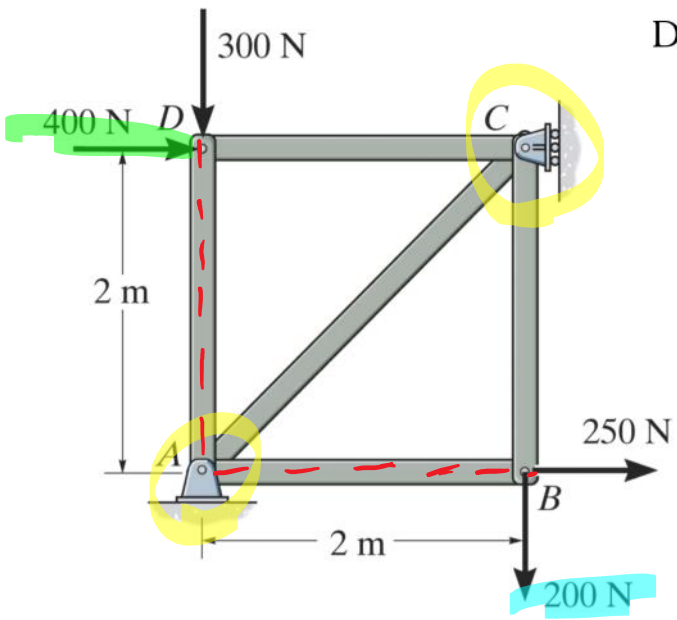

Determine the force on members AC.

FBD

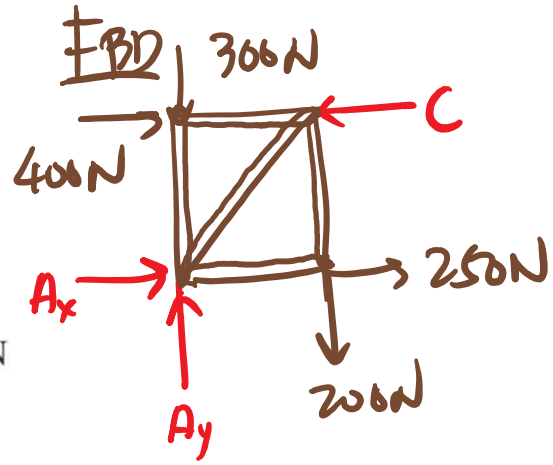

EoE

$$\Sigma M_A = -(2m)(200N) - (2m)(400N) + (2m)C = 0$$

$$C = 600N$$

14

Pin C

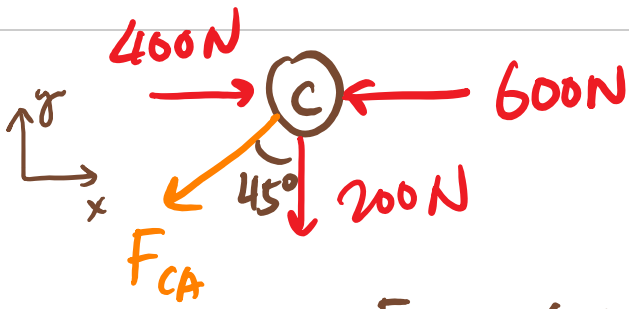

$$\Sigma F_y = -F_{CA}\cos 45° - 200N = 0$$

$$F_{CA} = -200\sqrt{2}\ N.\ (\text{Compression}).$$