Objective

- Equivalent Systems
  - Force
  - Moment
  - Distributed load

Example – 2D Equivalent System

What is the resultant force and moment on point *A* and *B* from F_1 and F_2?

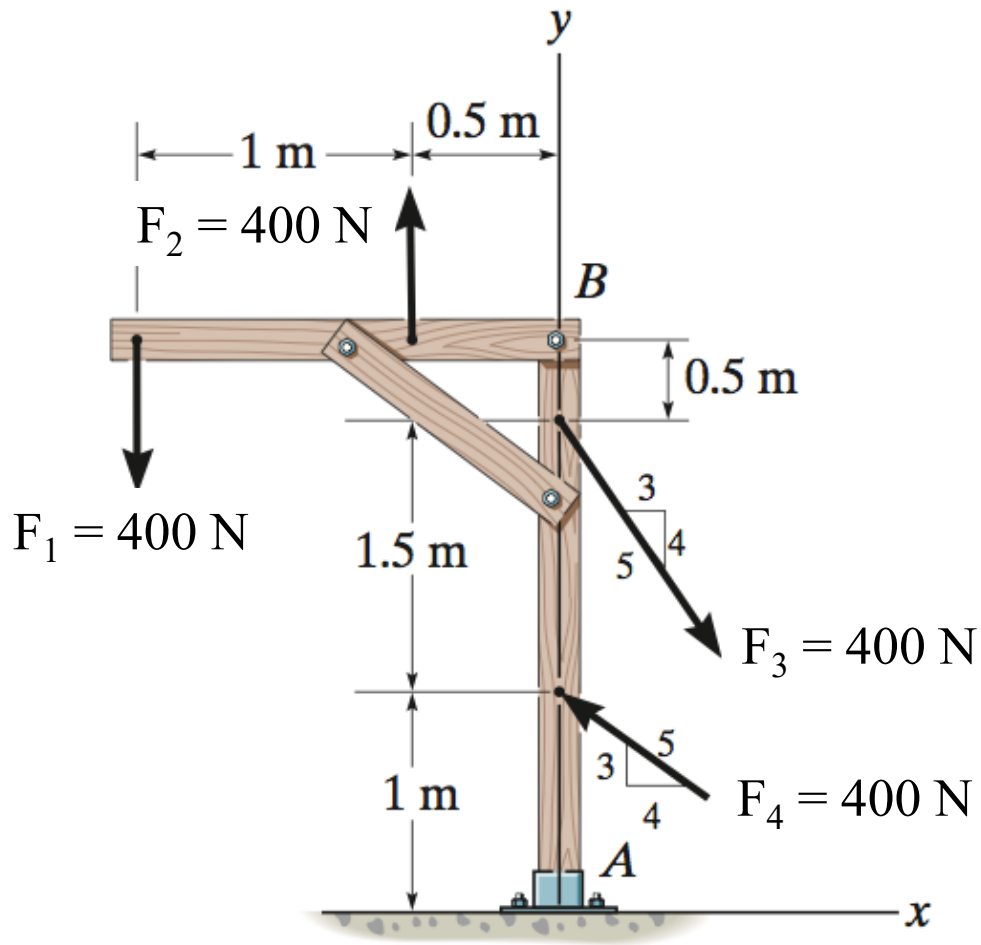

Example – 2D Equivalent System

What is the resultant force and moment on point *A* and *B* from F_3 and F_4?

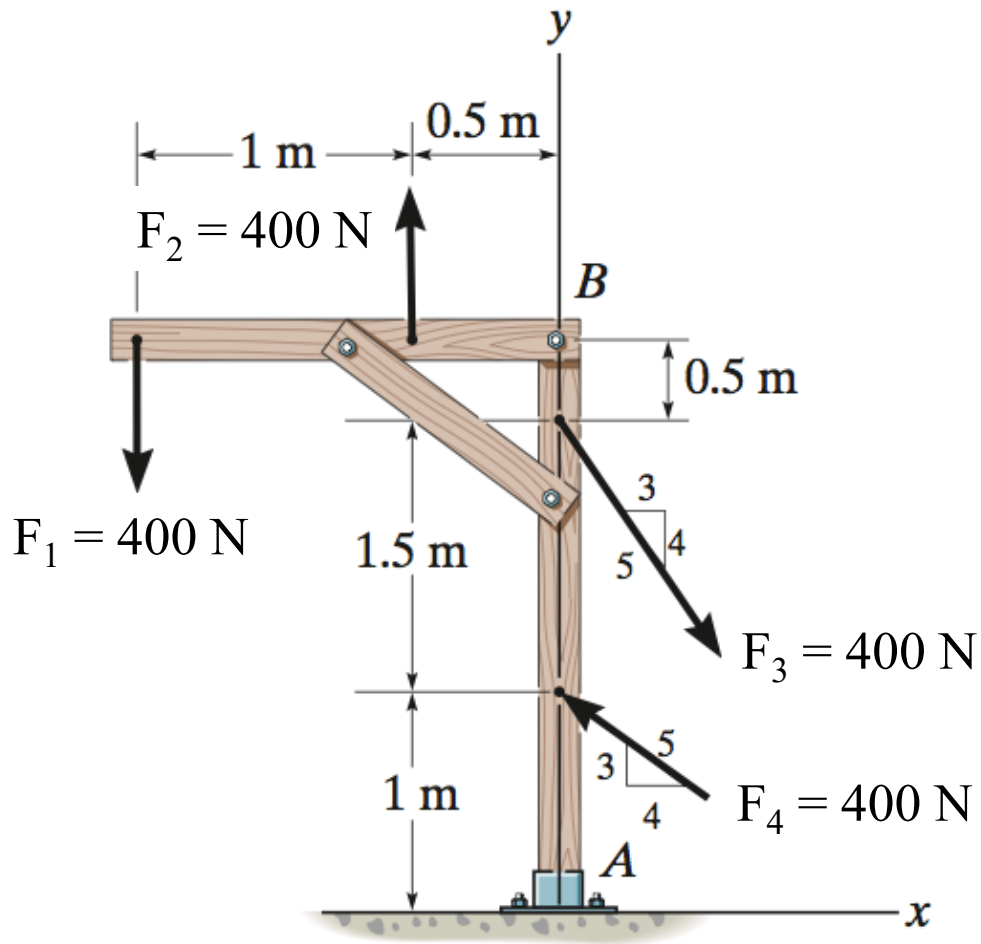

Example – 2D Equivalent System

Replace the loading on the frame by a single resultant force. Specify where its line of action intersects a vertical line along member *AB*, measured from *A*.

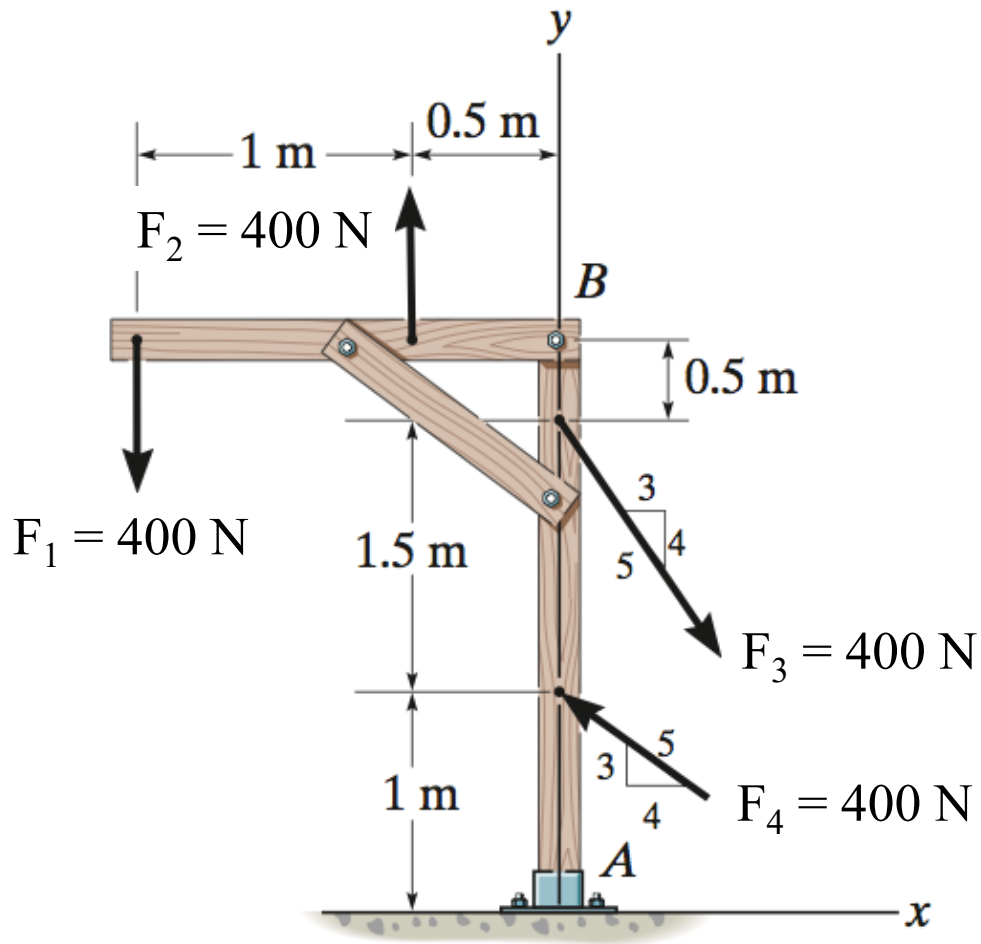

Example – 3D Equivalent System

Find the equivalent resultant force and couple moment at point *O* as the the two wrenches and the force acting on the pipe assembly below.

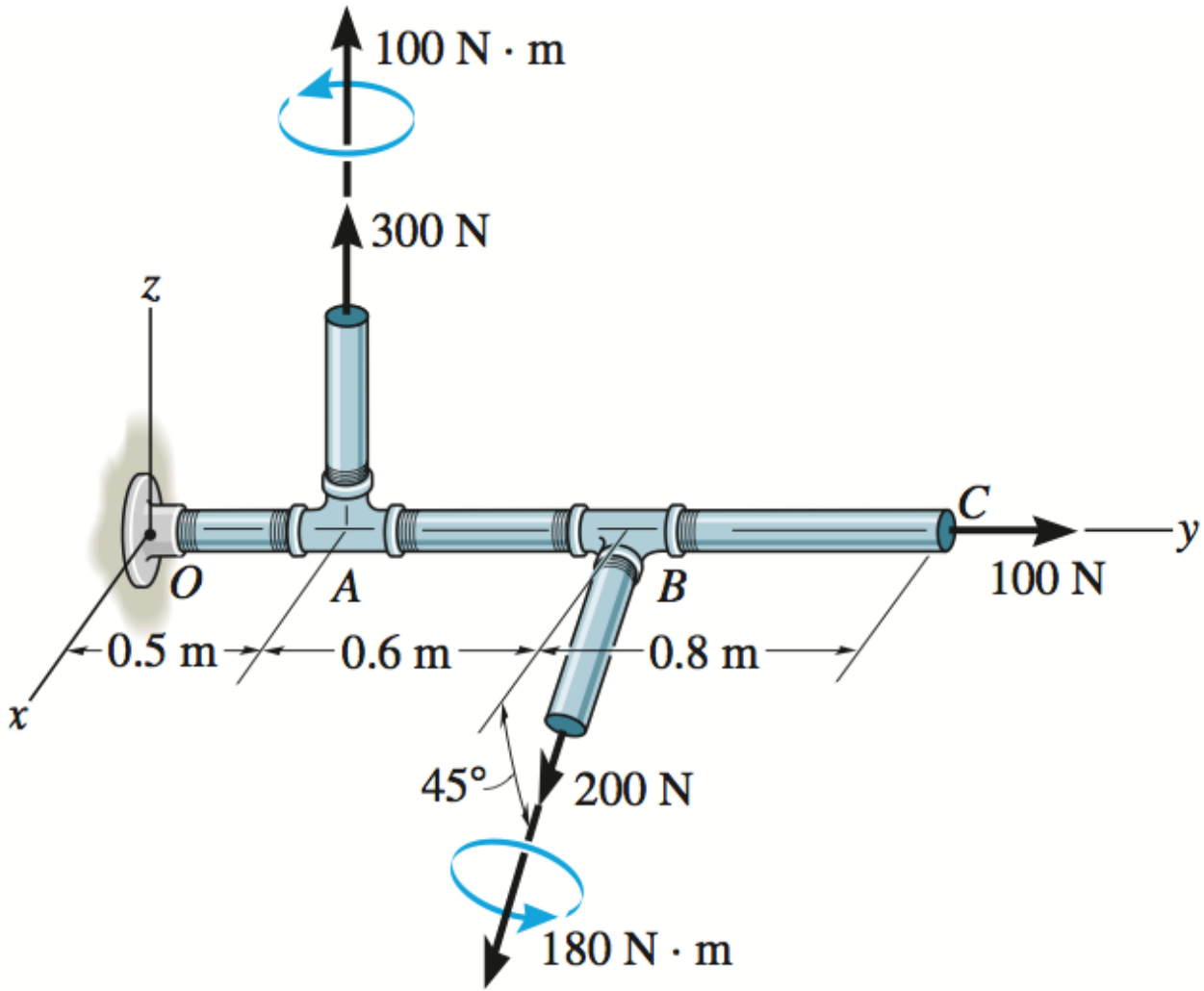

Distributed Loading

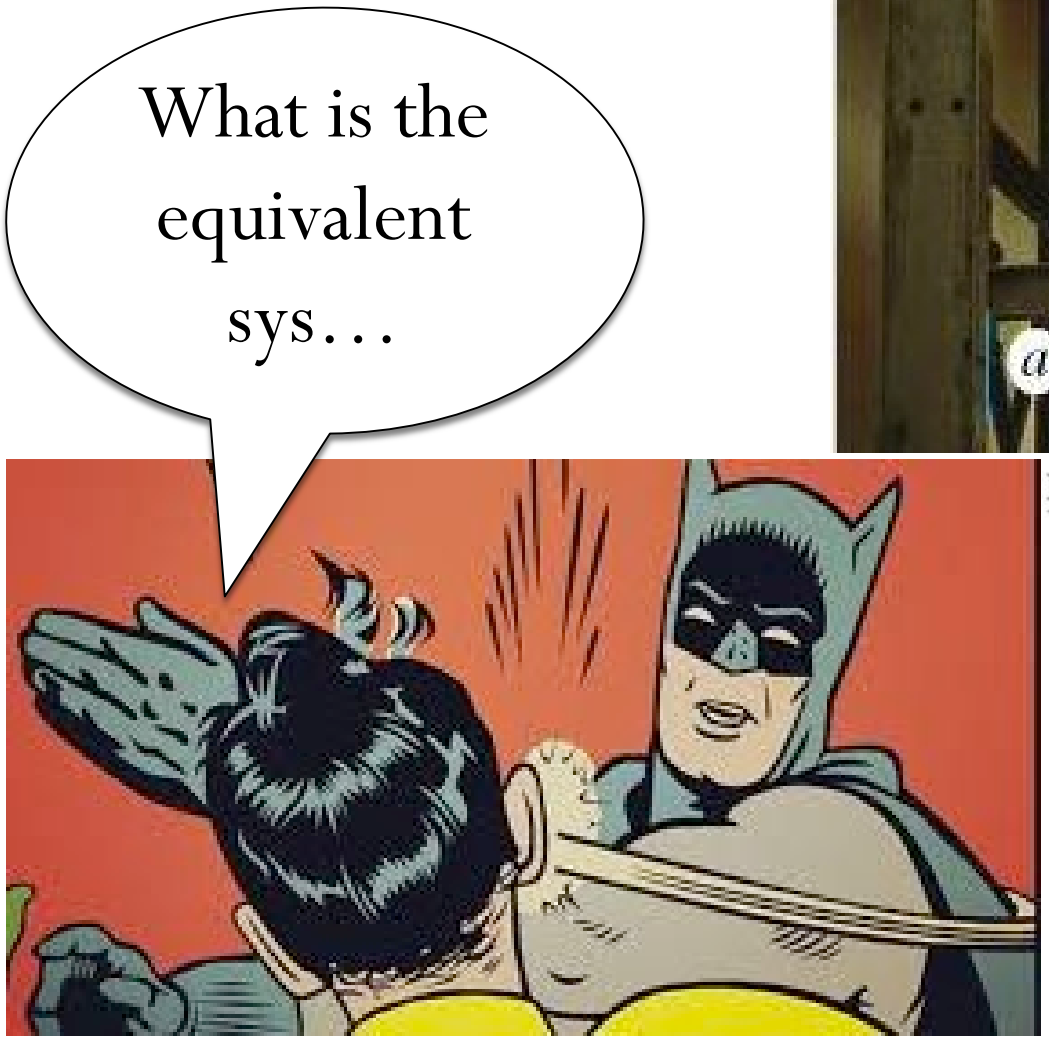

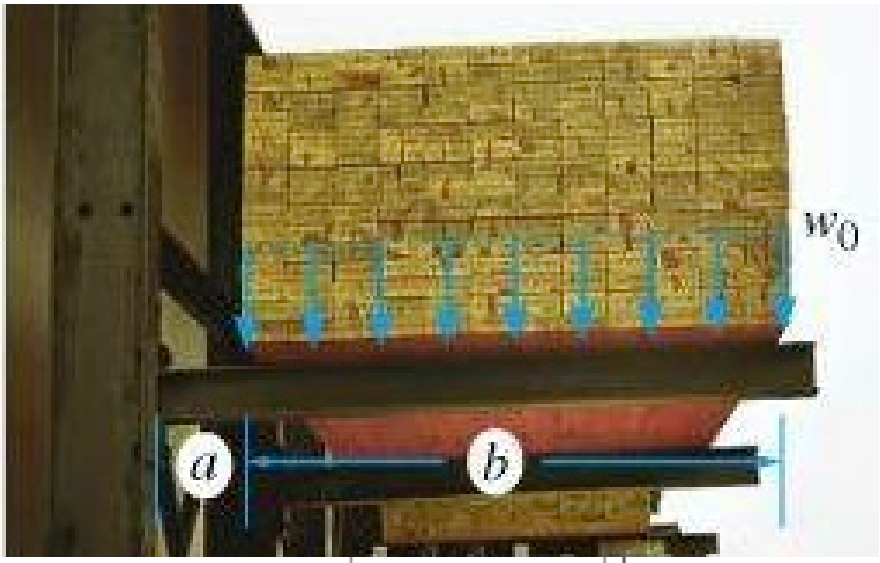

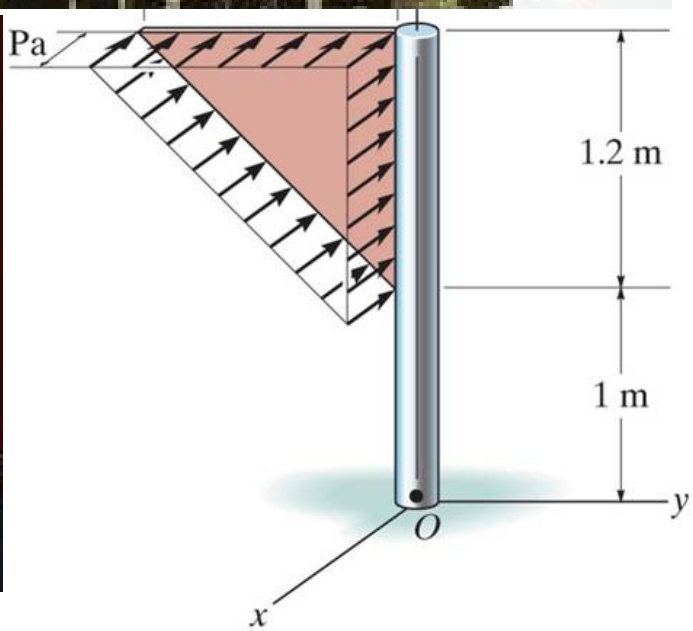

Distributed Loading

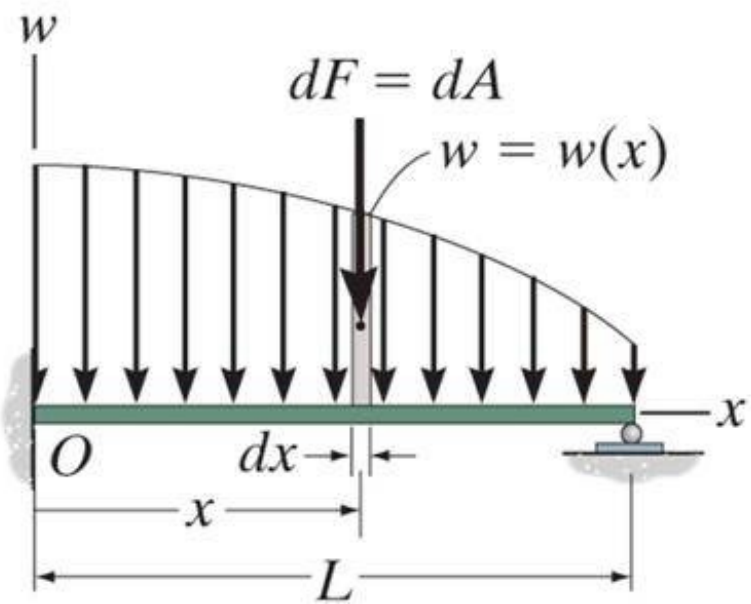

A common case of distributed loading in a uniform load along one axis of a flat rectangular body.

In such cases, w is a function of x and has <u>units</u> of

Consider an element of length dx. The force magnitude dF acting on it is given as

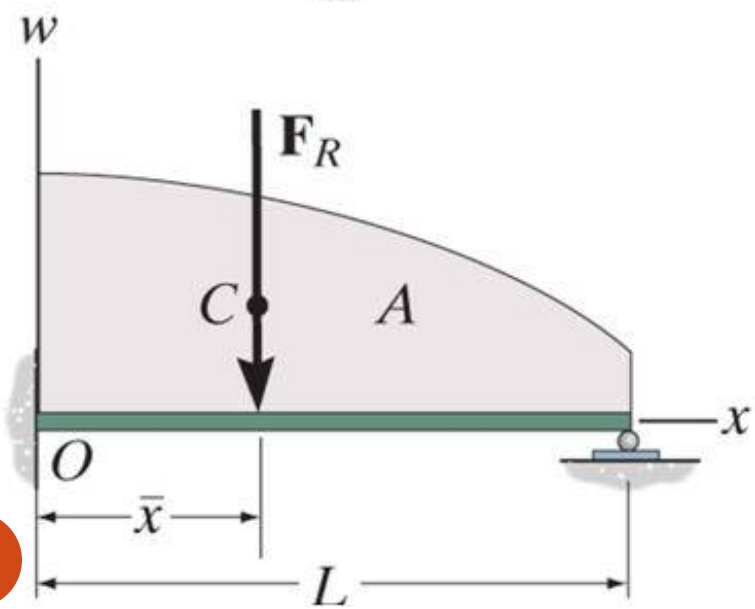

<u>The net force</u> on the beam is given by

Location of the Resultant Force

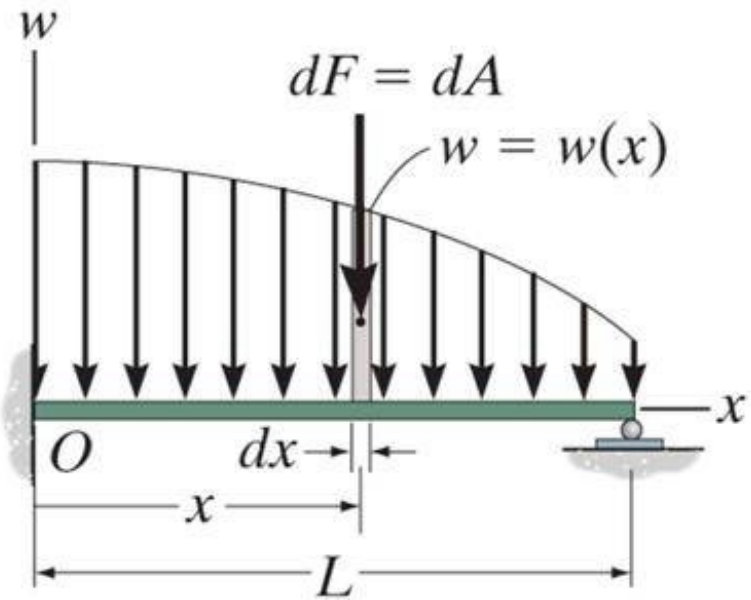

The force dF will produce a moment about O of

The total moment about point O is

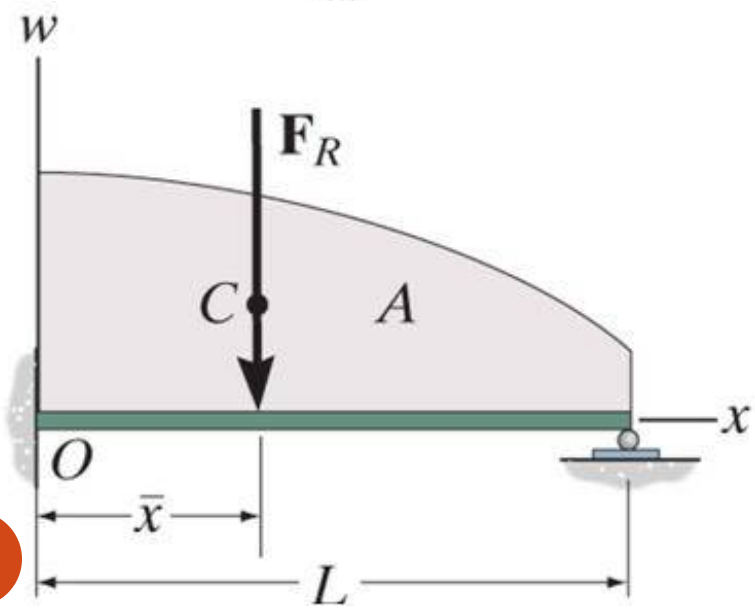

Assuming that $\mathbf{F}_R$ acts at $\underline{x}$, it will produce the moment about point O as

Hence,

Rectangle Loading

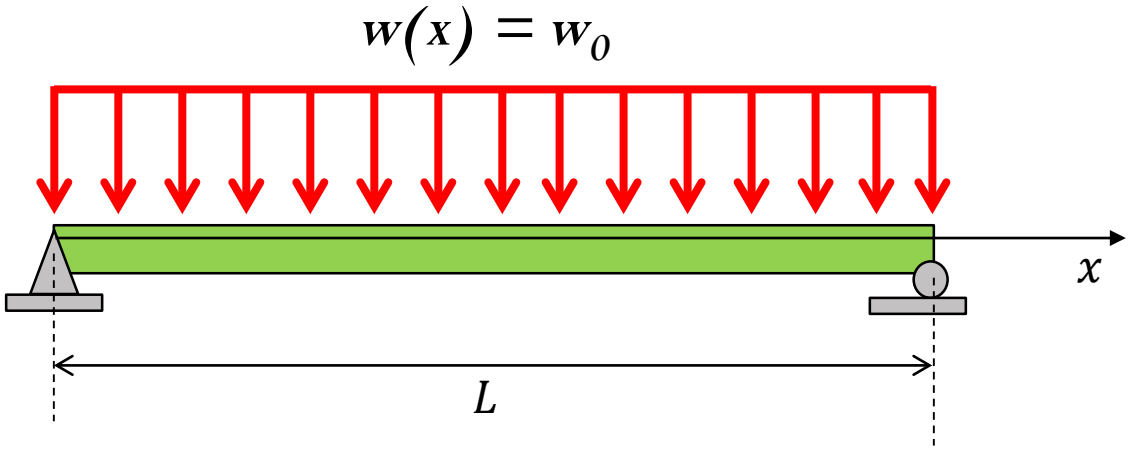

Triangle Loading

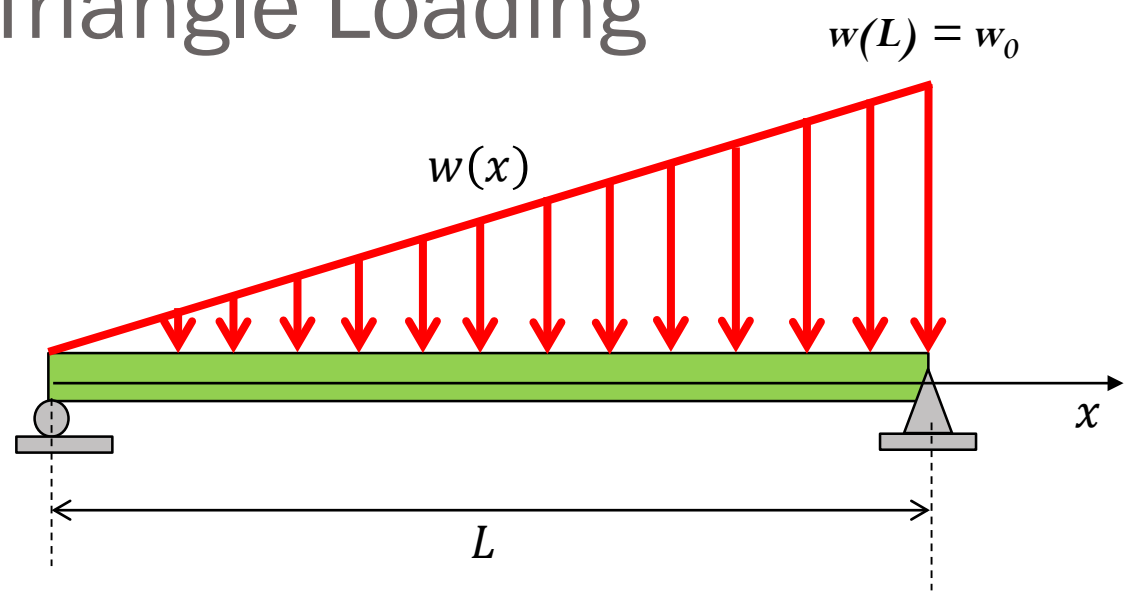

Example

Find the equivalent force and its location from point *A* for the loading on the beam as shown.

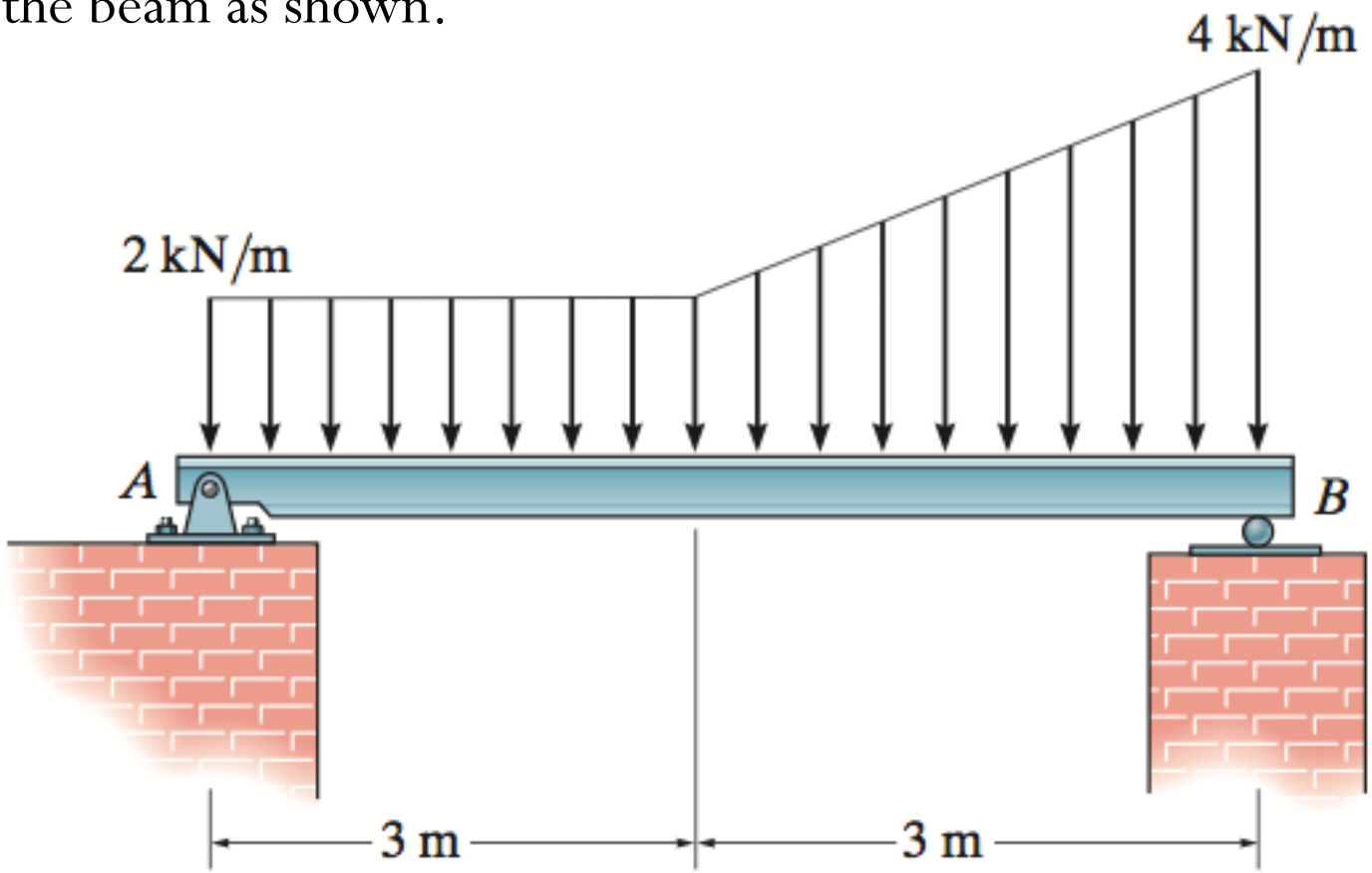

Example

Find the equivalent force and its location from point A for the loading on the beam as shown.