Announcements

- Quiz 1 continues
- If you are just joining us – check out the course website for all the logistics you need to know:

  https://courses.engr.illinois.edu/tam210
- Complete CATME survey <u>before</u> Sunday (1/27)

❑ Upcoming deadlines:

- Friday (01/25 – TODAY!)
  - Writtein Assignment #1
- Tuesday (01/29)
  - PL HW

Chapter 3: Equilibrium of a particle

Fundamental concepts

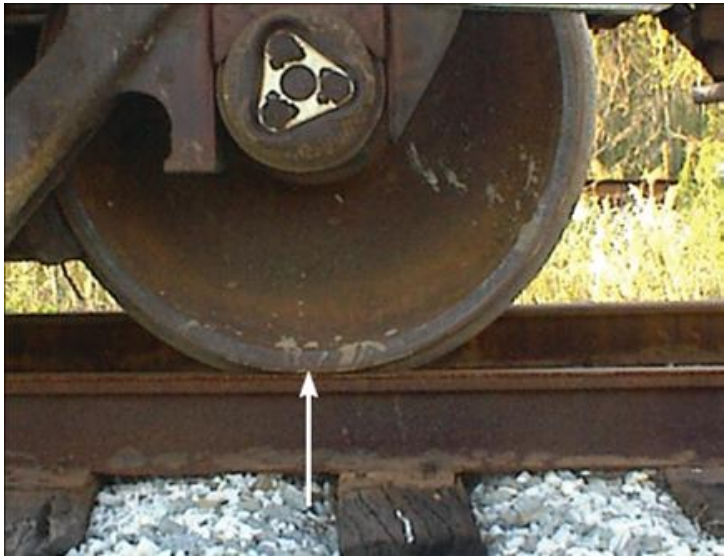

Basic quantities:

- Length
- Time
- Volume
- Mass

Idealizations:

- Particle:

  Has mass but neglect size (no geometry)

- Rigid Body:

  A combination of particles at a fixed distance, no deformation

- Concentrated Force:

  Loading acting at a point

Understanding and applying these things allows for amazing achievements in engineering! (planes, robotics, etc)

Goals and Objectives

- Practice following general procedure for analysis.
- Introduce the concept of a free-body diagram for an object modeled as a particle.
- Solve particle equilibrium problems using the equations of equilibrium.

Applications

For a spool of given weight, how would you find the forces in cables AB and AC?

If designing a spreader bar (BC) like this one, you need to know the forces to make sure the rigging (A) doesn't fail.

General procedure for analysis

1. Read the problem carefully; write it down carefully.

2. MODEL THE PROBLEM: Draw given diagrams neatly and construct additional figures as necessary.

3. Apply principles needed.

4. Solve problem symbolically. Make sure equations are dimensionally homogeneous

5. Substitute numbers. Provide proper units *throughout*. Check significant figures. Box the final answer(s).

6. See if answer is reasonable.

Free body diagram

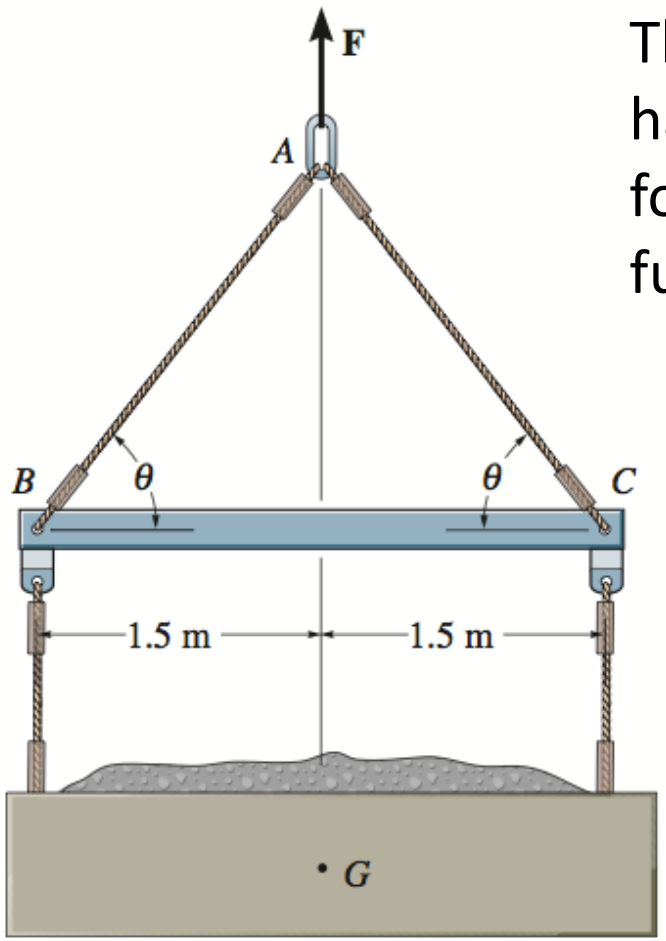

The lift sling is used to hoist a container having a mass of 500 kg. Determine the force in each of the cables *AB* and *AC* as a function of θ.

Idealizations

Pulleys are (usually) regarded as frictionless; then the tension in a rope or cord around the pulley is the same on either side.

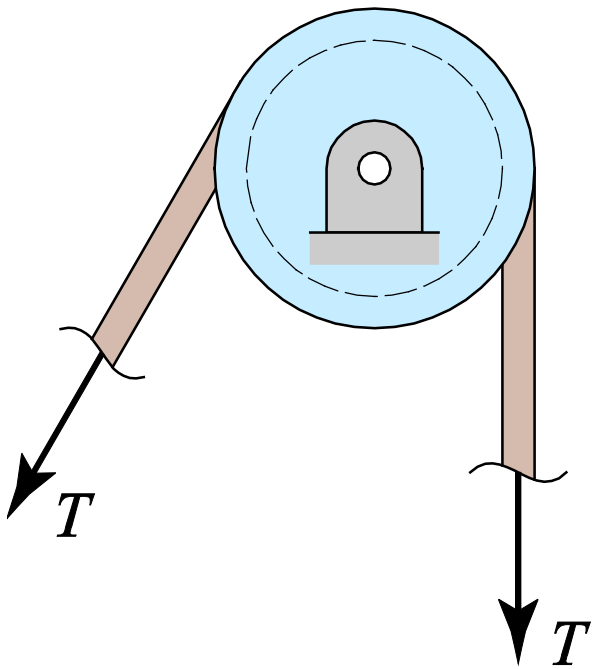

Frictionless pulley

Idealizations

Springs are (usually) regarded as linearly elastic; then the tension is proportional to the *change* in length *s*.

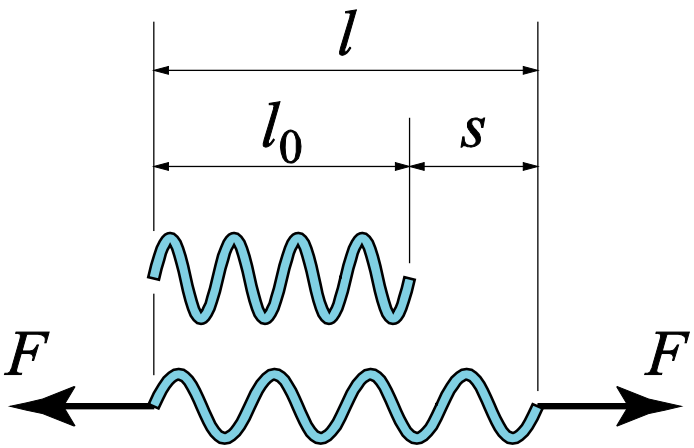

$$F = ks = k(l - l_0)$$

Linearly elastic spring

Idealizations

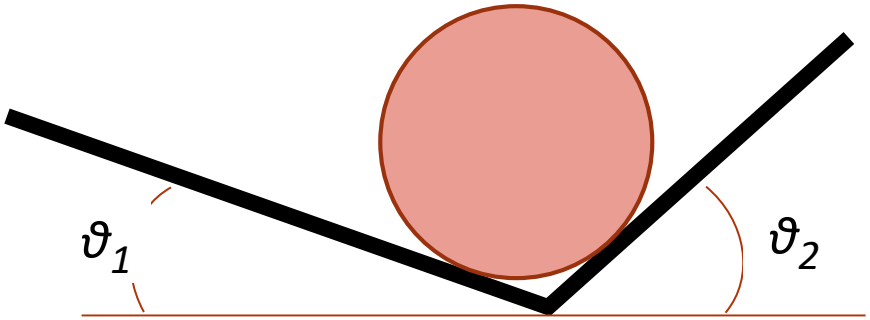

Contact force in smooth surface:

Free Body Diagram Example

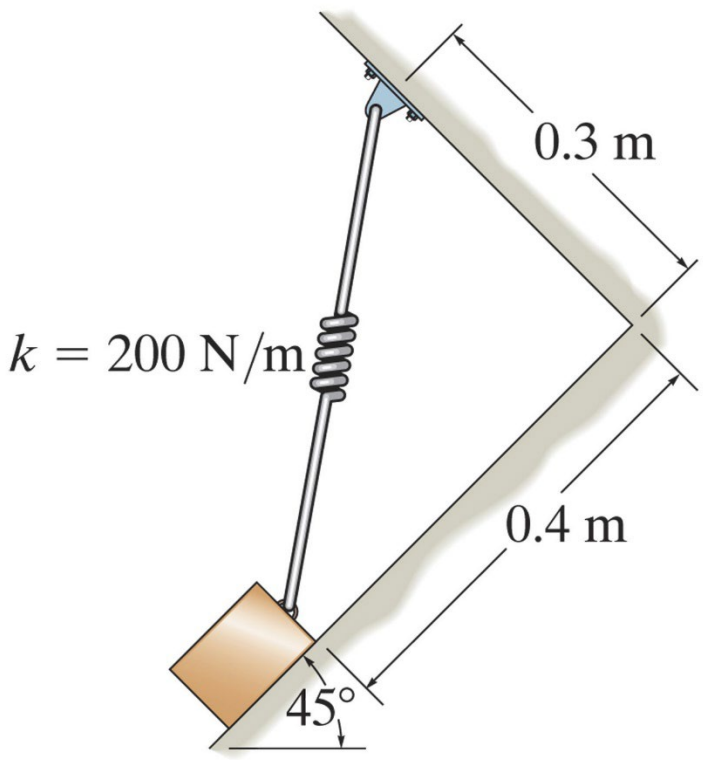

Free Body Diagram Example

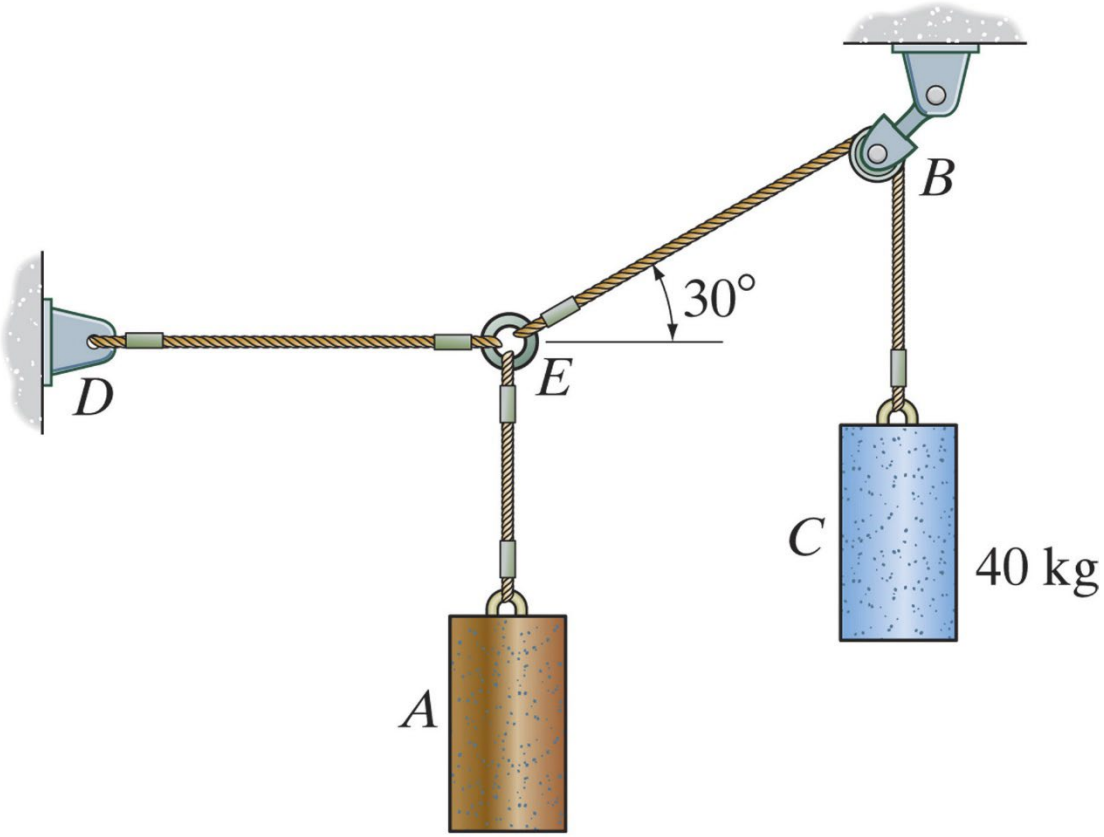

Equilibrium of a particle

According to Newton's first law of motion , a particle will be in **equilibrium** (that is, it will remain at rest or continue to move with constant velocity) if and only if

In three dimensions, equilibrium requires:

Coplanar forces: if all forces are acting in a single plane, such as the "xy" plane, then the equilibrium condition becomes

Example

If the spring *DB* has an unstretched length of 2 m, determine the stiffness of the spring to hold the 40-kg crate in the position shown.