Multiple Microphone Array

ECE 445 Spring 2017

Design Review

Thomas Kao
Kenneth Zhang
Sida Xiong

TA: Michael Fatina

February 24, 2017

1. Introduction

1.1 Objective

The problem that we are looking to solve with this project is accurate sound data collection using microphone arrays. This can be further split into two sub-problems. The first sub-problem is building a microphone array that can be easily scaled up or down and also reconfigured (i.e. changing the orientation and position of the individual array modules). The second sub-problem is accurately collecting sound data using the microphone array. This is subject to many issues such as synchronization of data between microphones in a single array and also clock skew between the array modules.

In our project, we will design and build a scalable microphone array with modular design. At the smallest scale, we will have one module with eight microphones. These modules can then be connected to build bigger arrays composed of a higher number of microphones, which offer higher resolution of measurements. The arrays can also be arranged in different configurations, depending on what is necessary for the current situation. With this versatility, we are hoping that our design can be used in many different scenarios and can capture a spectrum of frequencies. Our intended application is audio acquisition for the purposes of laboratory research. We would like to be able to have our array collect data and save that data to files on a USB. The data should be high quality (i.e. synchronized and with no noise). This data can then be used and processed at the user's discretion.

1.2 Background

Microphone arrays have been studied for many years. There have been many attempts to create scalable microphone arrays. Earlier efforts had been successful to a degree, but suffered from several drawbacks. For example, these groups did not have access to the new digital microphones that are available today, which are much smaller

and also more sensitive. As a result, these arrays tended to be too large, often occupying entire walls.

More recent microphone arrays have been able to take advantage of current technology, in order to shrink the overall size and also increase the quality of data capture. One example is this PhD student's thesis[1], where he was able to construct individual array modules with eight microphones that was small enough to fit on a mobile device.

In our project, we are planning to build individual array modules that are able to connect to each other in any orientation and scale up to any size. This gives flexibility to the user, so that they can use it in any situation.

1.3 High Level Requirements

- **Microphones must all be sampled synchronously.** Since sound waves take time to travel through air, a particular sound will reach differently-located microphones at different times. Thus, the usefulness of the audio data collected by microphones is contingent upon both its magnitude and the time it was collected. We intend to align the data temporally via post-processing using the DSP.
- **Data collected by microphones must be stored and transported to the processing system.** The raw audio data will likely need to be processed to be of use to research and commercial applications. To do this, the data will need to be processed within our microcontroller and then written into a USB to be stored and ultimately transported into a computer.
- **Data transmission system must be able to support high volume of audio data.** We will be sampling from eight microphones per microphone array at a frequency of 48KHz, with each microphone outputting 24 bits per sample. Thus each microphone array must be able to handle data transfer speeds of 144 KB/s.

2. Design

The system consists of three main components: the power supply, the array of microphones, and processing systems that are connected to each microphone array module. The power supply ensures that the array and processing system will be fully functioning by providing a continuous 3.3 V to the system. The sensor array will contain 8 digital MEMS microphones, which will act as sensors to detect the sound data in the environment. We will be building these microphones using the diagram in Figure 2. We are planning on testing different arrangements of the microphones to determine which one will yield the clearest results. The data from the sensors will then be moved to the processing systems, which contain a USB and a microcontroller. This allows the data to be transported conveniently to any computer.

The physical design, which we show in Figure 3, gives a clearer idea of one way that we could arrange the microphone array and the processing system on one module. Each module should be quite small, 20 cm in diameter. This will facilitate reconfiguration and scaling of the arrays. The distance between microphones is also something that we have to consider, due to synchronization issues. Adjusting the distance will change the arrival time of the sound to each microphone, which will require some changes in the synchronization scheme that we are using. The calculation for the arrival time of sound, based on the distance between microphones, is shown in Figure 4 and in Equation 1.

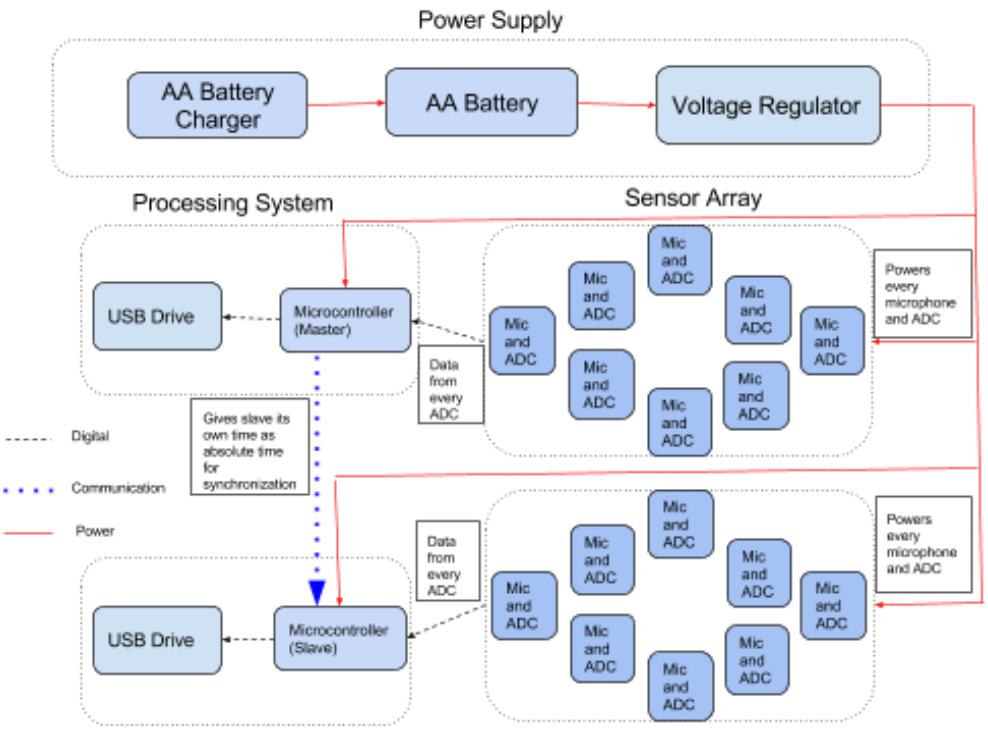

Figure 1. Block Diagram

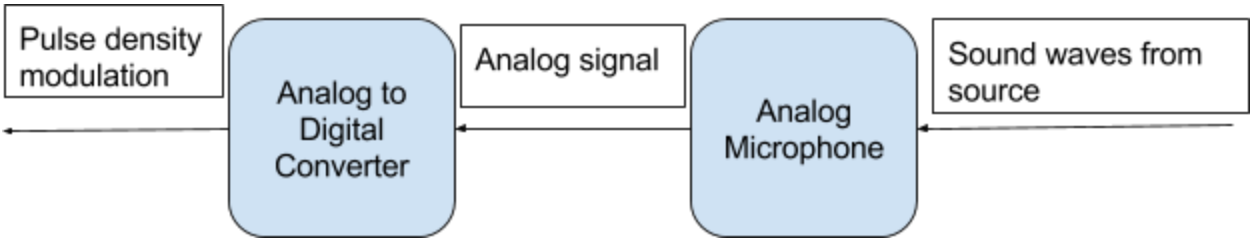

Figure 2. Digital MEMS Microphone Diagram

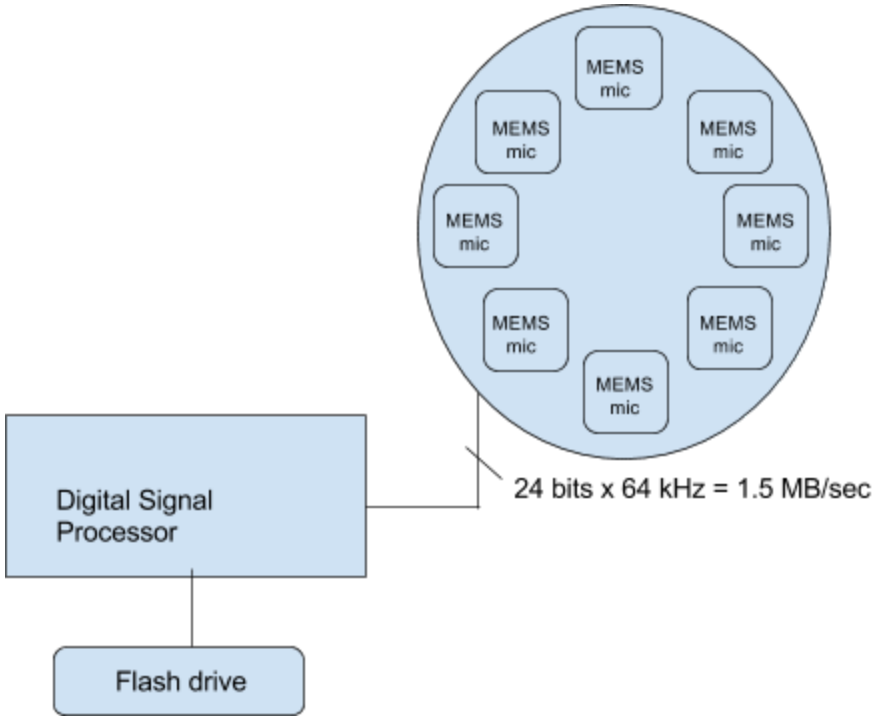

Figure 3. Physical Design of one module

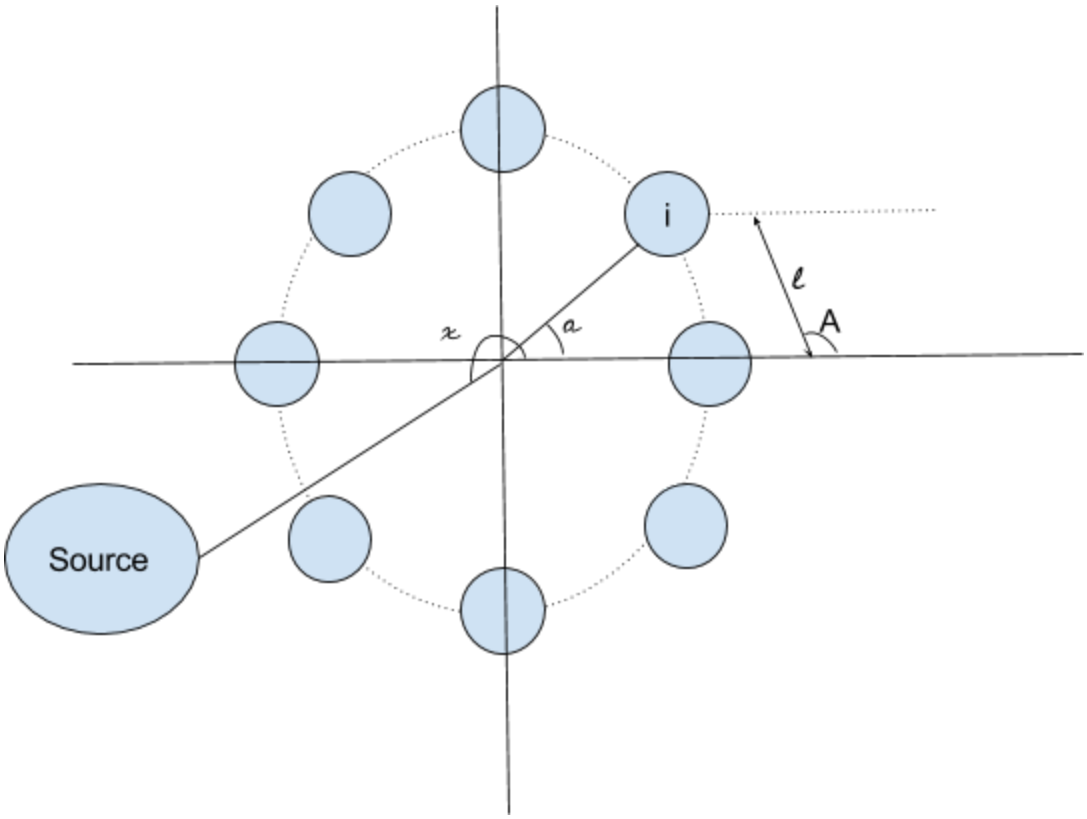

Figure 4. Example configuration of one module

$$\triangle t_i = \ell \sin(A + \pi/2 - \varkappa + (i-1)\alpha)/c \quad (1)$$

α = angle between microphones

ℓ = distance between microphones

A = obtuse angle formed by chord m1 and m2 and x axis

c = speed of sound

$\varkappa$ = angle to source relative to x axis

$\triangle t_i$ = delay between two microphones

Since our array will be uniform:

$\alpha = 2\pi/M$, where M is the number of microphones

$A = \pi/2 + \alpha/2$

$\ell = 2\, q \sin(\alpha/2)$, where q is the array radius

2.1 Power Supply

The power supply provides the circuit with 3.3 V at all times. We are using this particular voltage because the microphones that we are using operate between 1.6 V and 3.6 V. We are planning on using outlet power to supply the power system and we will use a lithium ion battery to keep the entire system continuously powered. The battery can be charged with outlet power as well. The voltage regulator will ensure that only 3.3 V will be supplied to the circuit at any time.

2.1.1 AA Battery Charger

We are going to be buying the AmazonBasics AA Battery Charger to charge our AA batteries that will keep our circuit continuously powered. The battery charger will be plugged into the wall and used to charge the batteries between sampling runs. This charger was chosen for its affordability.

2.1.2 AA Battery

The AA battery must be able to keep the circuit continuously powered. We will be using AmazonBasics AA High-Capacity Rechargeable Batteries which has a high capacity of 2400mAh. These batteries were chosen for their affordability and their resistance to lose capacity after multiple charges and long-term storage.

2.1.3 Voltage Regulator

We are going to build a voltage regulator that supplies the required 3.3V to the system from the 3.7- 4.2V battery. As shown in the circuit below, the circuit consists of an NPN transistor and a zener diode. This circuit will distribute a large proportion of the change in input voltage across the transistor and thus keeping the output voltage consistent [7].

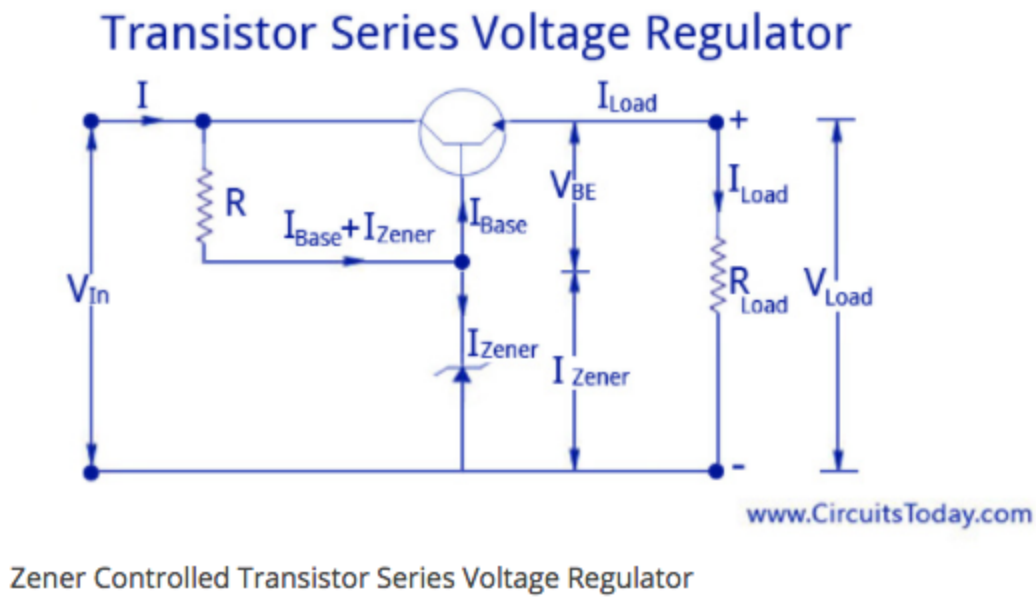

Figure 5: Circuit Design for Voltage Regulator [7]

2.2 Sensor Array

The microphone array will be used to detect sound data in the environment. Each array will consist of eight microphones orientated in a circular design, transmitting sound data to a microprocessor to be saved. With respect to scalability, one of these microphone arrays will hold the absolute clock used for synchronization with other microphone arrays that can potentially be attached to increase the area for sound sampling. Each microphone will output 24 bits of data per sample, which will then be transferred to the processing system on the module.

2.2.1 Digital MEMS Microphone

We will be constructing the digital MEMS microphones for the microphone array. The entire microphone will consist of an analog microphone and an analog-to-digital converter (ADC). We will be using the microphone model InvenSense ICS-40720 and TI PCM1807 ADCs. The microphones have a frequency range of about 55Hz - 20KHz, which is sufficient for our audio detection and recording [5]. Each ADC is single input, so one microphone will feed into each ADC. The ADCs will output 24-bit, I2S format audio data. Each module of the microphone array will contain eight microphones and eight ADCs.

2.3 Processing System

The main purpose of the processing system is to allow for processing and storage of data on each module. The data will then be sent to the microcontroller which will perform some processing on the data, such as synchronization, before storing it to a USB drive.

2.3.1 USB Drive

The main issue behind processing the audio data is its volume. We will be placing at least 8 microphones on each array and sampling at frequency 48 KHz, so there must be a storage unit that can handle that quantity of data (a little over 1 MB). Commercial USB drives can handle gigabytes of data, so there should be no issue with data overflow.

2.3.2 Microcontroller (ATUC256L3U)

This unit will handle pulling the data from all the microphone sources and saving the samples from the microphones into a USB drive. This microprocessor was chosen because of its affordability, its ability to communicate with other microprocessors for expandability, its USB interface, and it has eight ADC channels which allows us more flexibility in our microphone array design and configuration. It has performances of up to 64 millions instructions per second at a clock rate of 50 MHz, which is enough processing power to handle sampling from its eight microphones at 48 KHz. Each microphone array has its own microprocessor and two microphone arrays can be communicate with each other using the Master/Slave SPI interface, allowing us to achieve synchronization between the microphones on different arrays.

2.4 Software Requirements [50 points]

The primary concern of the system is synchronization. In order for the data to be meaningful, the samples from all of the microphones in the array must be synchronized. This process will be programmed into the microcontroller.

The synchronization algorithm is as follows:

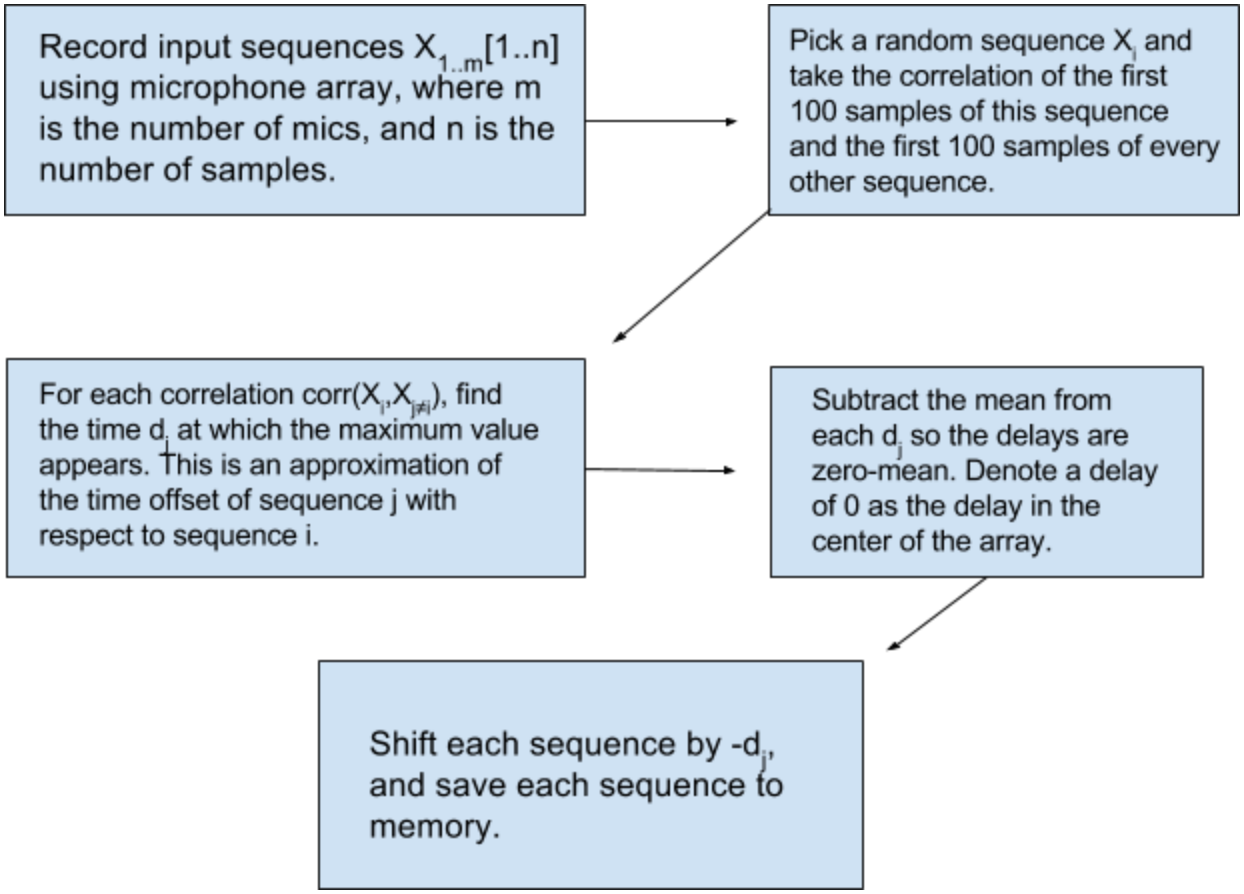

Figure 6. Flow Diagram for Synchronization

2.6 Tolerance Analysis

Our project must be robust to noise, since the quality of data produced by microphones can be reduced by the presence of high levels of noise. There are two potential sources of noise, depending on the intended application of the microphone array. The first is environmental noise, which will vary depending on the setting of the experiment involving the array. This noise source is dealt with via filtering using a low pass filter, which will be performed after the data has been collected. Our microphones have a reported signal-to-noise ratio of 94 dB SPL @ 1 kHz, which indicates high levels of signal in relation to levels of noise. If different microphones vary too greatly in their SNR, measurements taken by the array could potentially be skewed.

Additionally, the microphones on the arrays must sample at a high enough rate to capture delays in recording due to placement of microphones. This will come into play in potential localization applications. The shortest delay possible is in the following configuration of source and microphones:

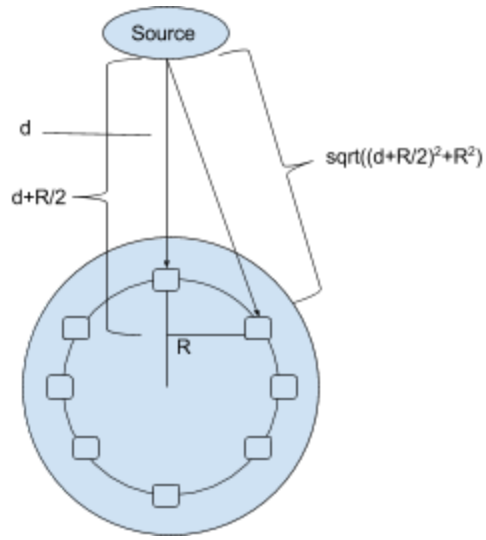

Figure 7. Source and Array Orientation

Here d is the distance between the source and the closest microphone in the array. We approximate the closest microphone as being located on the line between the middle of the array and the source. The shortest possible time difference is $\text{sqrt}((d+R/2)^2+R^2) - d$, which we will denote as Δd. For any two microphones, the Δd must be higher than 340.29 m/s * (1/48 khz) = 0.007089374 m, which is the distance traveled by sound in the time one sample lasts. By solving for the equation: $\text{sqrt}((d+R/2)^2+R^2) - d > 0.007089374$ m, we get the maximum distance we can place a source and have a discernable delay for two microphones. This equation has no solution for d when plugged into Wolfram Alpha, so we will approximate the two microphones as being on a flat plane, yielding the equation: $\text{sqrt}(d^2+R^2) - d > 0.007089374$ m, which gives us the solution $d < 0.701$ m, indicating that for the most accurate localization operations, the source must be located within 0.701 m of the array.

3. Requirements and Verification

1. Voltage Regulator [10 points]

Requirements	Verifications
1. Provides 3.3 V +/- .2V given a 3.7-4.2V input source	1. a. Use a constant current test circuit and connect the battery to the input of the voltage regulator and the output of the voltage regulator to the “VDD” of the constant current test circuit b. Draw 100 mA of current and then use an oscilloscope to determine if the voltage is within 3.1 - 3.5V

2. Digital MEMS Microphone [40 points]

Requirements	Verifications
1. Must be able to detect all frequencies of the human voice (80 Hz - 260 Hz)	1. a. Create a small circuit with the microphone b. Play sounds of different frequencies next to the microphone c. Use a voltmeter to detect changes in the microphone output

4. Cost

Name	Hourly Rate	Hours	Total	Total x 2.5
Thomas Kao	$32.00	300	$960	$2,400
Kenneth Zhang	$32.00	300	$960	$2,400
Scott Xiong	$32.00	300	$960	$2,400
Total				**$7,200**

Part	Cost
AmazonBasics AA Rechargeable Batteries * 16	$24.99
AmazonBasics Ni-MH AA & AAA Battery Charger With USB Port	14.99
ON Semiconductor 2N3055: 15 A, 60 V NPN Bipolar Power Transistor * 5	$1.00 * 5 = $5.00
ATUC256L3U * 5	$7.84 * 5 = $39.20
InvenSense ICS-40720 * 25	$2.80 * 25 = $70
TI PCM1807	$2.53 * 25 = $63.25
Total	**$217.43**

5. Schedule

Week	Scott's Tasks	Kenneth's Tasks	Thomas' Tasks
February 27, 2017	Research different DSPs and potential microprocessors to use. Work on the module descriptions for the Design Review.	Look into the different synchronization algorithms for syncing the microphones in one array. Draw up some mock design sketches. Come up with a couple of potential array designs. Work on the software design portion of the Design Document.	Research different MEMS microphones to use in our array and pick a few good options. Write the project description section and diagrams for design.
March 6, 2017	Look for a microprocessor for our final design as well as Arduino kits we can use to start prototyping. Adjust the module descriptions with the parts revision. Fix the schedule section to document what each team member is going to do	Calculate the math for our design and how we would implement our algorithm with our finalized design. Revising the tolerance analysis and algorithm/software requirement portion of our Design Document.	Look into how to build our own MEMS microphones and what parts we would need. Revise the project description and include additional information/revision s for the block diagram.
March 13, 2017	Start ordering parts for the final design. Research and construct a prototype to run algorithm tests.	Start coding the synchronization algorithm for the prototype array. Work on the code to save sound samples into our USB drive.	Get all the parts for the voltage regulator and build it. Finalize the design for the PCB to send to get made.
March 20, 2017	Confirm that one microphone is fully operational and then configure the model	Begin synchronization algorithm for syncing up microphones between different microphone	Build the MEMS microphones and connect to test on prototype model.

	with more microphones. Begin building the final product when parts arrive.	arrays.	Begin building the final product when parts arrive.
March 27, 2017	Configure the synchronization algorithm to work with two microphone first and then expand onto the remain 6 microphones.	Help test and configure the synchronization between the microphones in one array.	Start building and adding the microphones onto final product. Make any revisions for the PCB that were discovered.
April 3, 2017	Make any final adjustments to sync all the microphones in one array, confirming that all the save data is correct.	Finalize and begin testing synchronization algorithm for two microphone arrays on prototype models.	Design prototype model for testing synchronization between two arrays. Start building the second microphone array.
April 10, 2017	Help with the debugging the synchronization algorithm for two microphone arrays.	Continue debugging the synchronization algorithm for two microphone arrays.	Prepare our first microphone array ready for the Mock Demo. Organize Mock presentation slides.
April 17, 2017	Test final product and note and changes and adjustments made for the final report. Prepare final report.	Debug/adjust any remaining issues with the synchronization algorithms. Prepare for final demo.	Make any hardware adjustments for the final demo/presentation. Prepare for final presentation.

6. Ethics and Safety

We declare that everything encompassed in our project notebooks and documentations are our own work except where explicitly stated otherwise in the text.

Because we will be collecting a lot of sound data, we will be honest and realistic with our claims and estimations based on available data [3]. Similarly, privacy issues may arise when we are collecting and saving sound samples using participants for sound localization. Thus adhering to the ACM Code of Ethics 1.7, we must “respect the privacy of others” and will provide a full disclosure about what we are going to do with their sound samples and who will have access to them. We will only use the participants sound samples for the reasons outlined in the provided disclosure and we will honor all confidentiality from our participants and only use samples provided we have consent from the individual [3].

Our project builds off existing information and thus we must honor any property rights including copyrights and patents and will include within our documentation a list of products and accredit them accordingly [4]. With all the practical used for a microphone array, helping collect and provide raw sound data will benefit our fellow colleagues’ research in their professional development as well as improving our technical competence involving microphone arrays [3].

With respect to safety, we will be working with batteries as a means for powering our microphones and therefore need to document any potential safety concerns. Because we are using rechargeable AA batteries, we need to provide warnings about potentially overcharging the AA batteries which can cause the batteries to overheat and avoid placing near flammable objects while charging. With the potential of using our microphone array for sound sampling in an outdoors environment, we will need to account for moisture and temperature affecting the performance of our hardware. Our

voltage regulator is susceptible to changes in performance from increasing rooming temperature and moisture levels. Thus we will be testing our design in a controlled room environment so temperature fluctuations should not be a issue but we will need to adhere to IP35 guidelines for the power supply enclosure which protects the internals from wires and small tools as well as protection from low pressure water jets from any direction [8].

7. References

[1] Zwyssig, Erich. "Speech Processing Using Digital MEMS Microphones." (n.d.): n. pag. Http://homepages.inf.ed.ac.uk/srenals/pdf/erich-thesis.pdf. University of Edinburgh, 2013. Web.

[2] Litvinovich, Artem. "The Daredevil Camera." Ribbonfarm. Ribbonfarm, 29 June 2016. Web. 23 Feb. 2017.

[3] Ieee.org, "IEEE IEEE Code of Ethics", 2017. [Online]. Available: http://www.ieee.org/about/corporate/governance/p7-8.html. [Accessed: 23- Feb- 2017]

[4] acm.org, “ACM Code of Ethics and Professional Conduct”, 2017. [Online]. Available: https://www.acm.org/about-acm/acm-code-of-ethics-and-professional-conduct. [Accessed: 23- Feb- 2017]

[5] learn.adafruit.com, “Adafruit I2S MEMS Microphone Breakout”, 2017. [Online]. Available: https://learn.adafruit.com/assets/39633. [Accessed: 23- Feb- 2017]

[6] ti.com, “TMS320C6418”, 2017. [Online]. Available: http://www.ti.com/product/TMS320C6418. [Accessed: 23- Feb- 2017]

[7] circuitstoday.com, “Voltage Regulators”, 2017. [Online]. Available: http://www.circuitstoday.com/voltage-regulators. [Accessed: 7- March- 2017]

[8] mpl.ch, “IP Ratings (Ingress Protection)”, 2017. [Online]. Available: http://www.mpl.ch/info/IPratings.html. [Accessed: 7- March- 2017]