Ultrasonic Spatial Awareness Device for the Visually Impaired

By

Adam Auten

Robert Kummerer

Yuan Chih Wu

Design Review for ECE 445, Senior Design, Spring 2017

TA: Zipeng Wang

25 Feb 2017

Project No. 58

Contents

1 Introduction

1.1 Objective

There are 40 million legally blind people in the world today, and yet the most popular blind mobility aids have never improved past white canes and guide dogs [1]. It therefore seems natural that we should strive to improve blind mobility aids with our current technology. The most commonly-used solution is the white cane, which nonetheless presents several issues. It only provides extremely localized feedback at the tip of the cane [2]. Moreover, it requires the user to physically manipulate the device with one hand, which prevents them from using that hand for other purposes (i.e. using the cellphone, carrying groceries bags in more than one hand, using more than one crutch/walking cane, etc). Finally, it requires a sufficient amount of training as well as dexterity to use well and effectively, which is a deterrent to relying on the white cane as a means to be mobile for many people [3].

We envision an affordable solution that will address these weaknesses by being a hands-free wearable that provides a more complete understanding of the user's immediate surroundings. Unlike the white cane, this device would provide continuous sensing of obstructions in multiple directions (at a fixed elevation angle projecting from the torso), while leaving the user's hands free. While having multiple elevation angles covered would be a more complete solution and have the ability to supplement the white cane, it adds much more complexity; we will focus on satisfying the current conditions and leave that for future work. This project is thus supplementary to the white cane.

Our proposed solution is a 360-degree ultrasonic sensor system with haptic feedback: it will continuously calculate the distances of the surrounding objects through sonar technology, and relay information to the user through haptic feedback located on a belt (to model the 360-degree environment for directional feedback). The information will be encoded as higher intensity vibrations for closer objects, and lower intensity vibrations for farther objects. In addition, our solution will aim to help the user navigate more easily to their destination, and so the haptic belt will also provide information about cardinal direction: the haptic belt will produce pulsed vibrations in the north direction when the user switches on the geomagnetic feedback mode.

1.2 Background

The World Health Organization estimates that 285 million people worldwide are visually impaired, 40 million of whom are totally blind. About 90% of visually-impaired people live in low-income settings, meaning that

a distributive solution must be low-cost and reliable [4]. Additionally, most blind people require a way to be mobile and independent to some degree.

The two major mobility aids for the visually-impaired currently are white canes and guide dogs. White canes have restricted range as well as inability to detect over-the-knee obstacles that could cause collisions and injuries. Moreover, they require certain levels of dexterity and training to use well, which is a deterrent for many blind people to be mobile [3]. Guide dogs primarily fulfill three specific assistance functions: grasping (picking up objects), physical support, and pulling (wheelchairs). There is no additional understanding of one's environment through the use of guide dogs, and in fact most users supplement guide dogs with the white cane as well [5]. On the technology side, there exists use of miniguides, which are sonar or laser-based pointers that give either haptic or audio feedback; however, their limitation lies in being just as localized as the white cane [6]. There is, then, a market niche for providing a more useful, informative feedback device to the visually-impaired user about the state of their environment.

Research on current assistive technologies show that existing electronic devices have not seen widespread use. According to a 2016 publication in Neuroscience and Biobehavioral Reviews, one limit of existing "technological canes" is that they have a limited spatial range (i.e. only give feedback in one direction at a time) [7]. Likewise, they do not give feedback about global spatial information, only about immediate surroundings, which we believe our integrated cardinal direction feedback would help to address.

Additionally, we reached out to a family member of one of our teammates who is legally blind as well as hearing-impaired, and interviewed her about her needs and subsequent opinion of a wearable device that gave haptic feedback through a belt. She noted that since she is losing her hearing as well as her sight, audio feedback is useless for her, and she is therefore a proponent of haptic feedback. She is also physically feeble and requires the use of walking canes, and so the wearable aspect of this device is appealing for her. This interaction exemplified the World Health Organization's statistic that the elderly are most at risk for visual impairment, and due to the aging process are also likely to possess more than one impairment. We believe choosing haptic feedback provides two-fold benefit by not blocking one's hearing: a visually-impaired person often ends up depending more heavily on their hearing, and moreover some people are both visually-impaired and hearing-impaired. Choosing a wearable solution also frees up the user's hand such that they can support themselves with walking canes if necessary. We hope to reach out to more visually-impaired people over the course of this project to adjust our design to better suit their needs.

1.3 High-Level Requirements

The three high-level requirements are sensing, haptic feedback, and power.

1. The intensity of haptic feedback must increase with obstacle proximity in a given direction and indicate the direction of magnetic north with respect to the wearer.

2. The end-to-end latency of the system from sensor to haptic feedback must be less than 200 milliseconds[1].

3. The device must run on battery power for a typical 8-hour day; the power module must also be completely safe for the user.

[1] Assuming average walking rate 1.5m/s, largest gait is ~2.5ft, which corresponds to 0.5 seconds/step. Accounting for a 0.3 second reaction time from haptic triggering to perception to action, we would like the user to become aware of the object within the time to take one step. This leaves 0.2 seconds for end-to-end system latency. (0.2s + 0.3s = 0.5s).

2 Design

2.1 Block Diagram

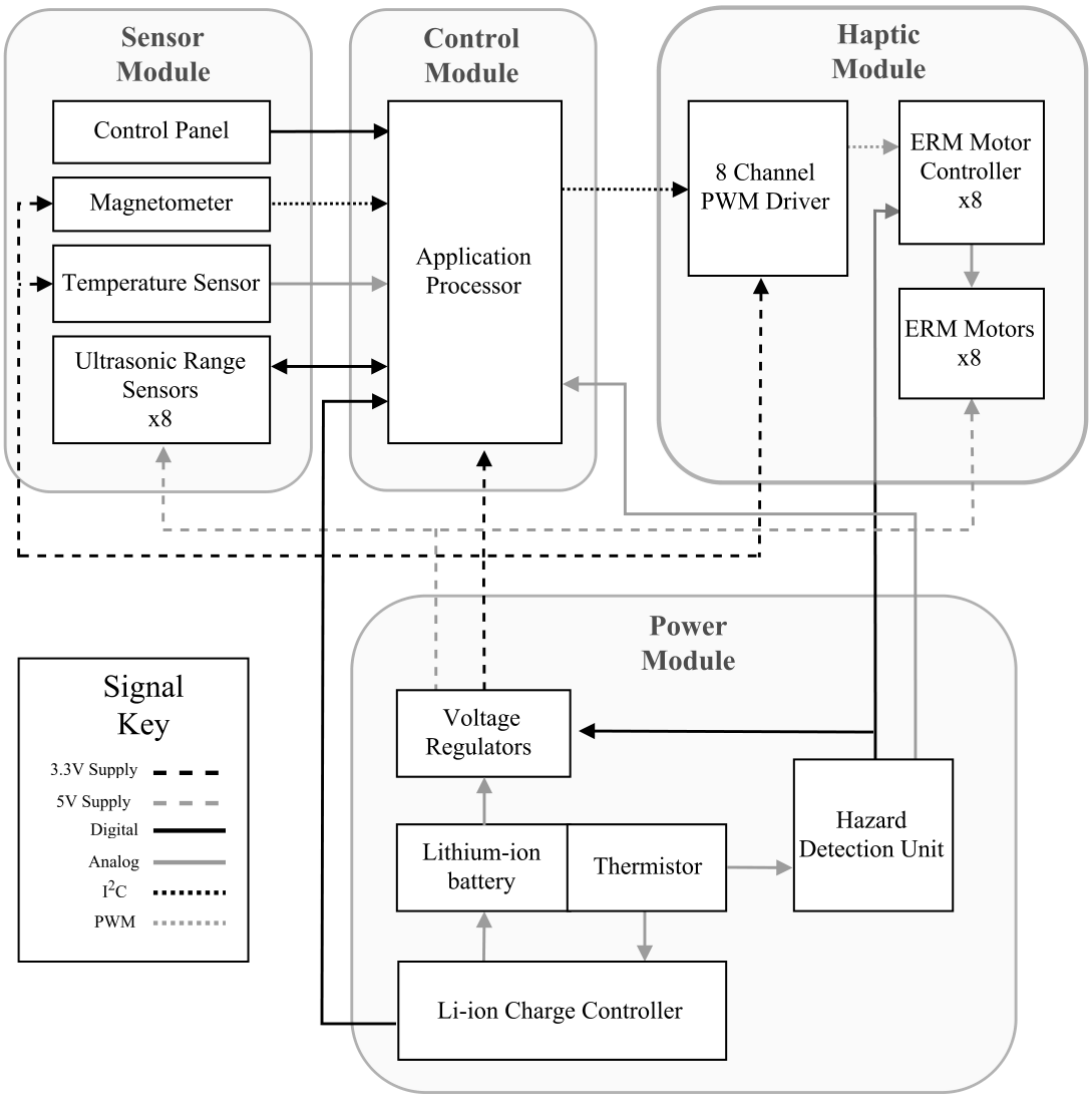

Figure 1: Block Diagram

The design can be broken down into four core modules: the sensor module, the control module, the haptic module, and the power module. The sensor module collects data from the user and his/her environment, which is then read by the control module for analysis. Once the control module has determined the proper stimulus, it encodes that stimulus and sends it to the haptic module. The haptic module is responsible for converting the feedback signal into mechanical vibrations that can be felt by the wearer. The power supply

and battery charging circuitry is the responsibility of the power module.

Components of the sensor module include 8 ultrasonic range finding sensors to locate objects in the wearer's immediate surroundings and a magnetometer for locating magnetic north. Also included is a temperature sensor so that the speed of sound can be accurately estimated. Additionally, the sensor module contains controls for the main power switch, a haptic feedback intensity adjustment knob, and mode switches. The control unit consists of a microcontroller to process the sensor readings. The haptic module consists of 8 eccentric rotating mass (ERM) actuators that vibrate with a controlled intensity. These will be evenly spaced around a belt and worn about the midsection. The intensity of vibration of a particular motor increases with the proximity of an obstruction in the direction corresponding to the location on the body the ERM is worn. Also, the location of magnetic north will also be indicated through the belt by pulsing an ERM in that given direction. The power module supplies rechargeable Lithium-ion battery and monitors for hazardous battery conditions.

2.2 Physical Diagram

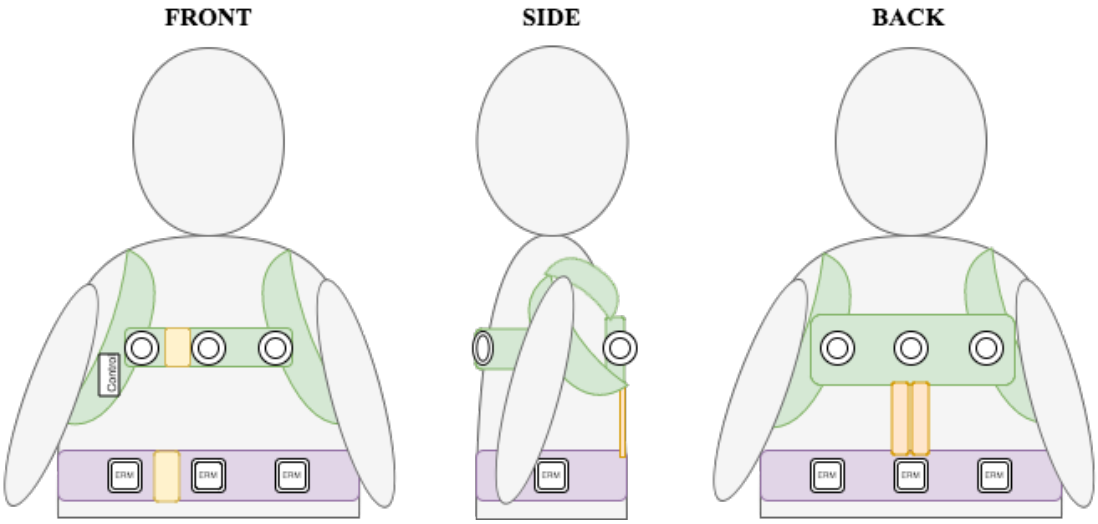

Figure 2: Placement of the I/O components on the user

The physical device is a two-part design composed of a harness and a belt. The harness is the mount for the ultrasonic sensors, which are affixed in 45 degree increments all around the torso, and the power module and application processor are integrated in the rigid pack on the back of the harness. The haptic belt is the mount for the ERM actuators, which are affixed in 45 degree increments all around the waist. The harness will need to transmit power and data to the haptic belt, and so they will be joined together via rigid cabling to protect the wires as well as provide structural rigidity to hold the entire physical device together.

At the front of the harness, we have three ultrasonic sensors mounted on the front strap and the control panel mounted on the right strap. The control panel contains three rocker switches and rotary dial for user control, and is positioned on the lower half of right arm strap for convenient access and to minimize the possibility of blocking a sensor during access. At the back of the harness we have the rest of the five ultrasonic sensors mounted on the rigid pack. We chose to mount the side sensors at the back to minimize the possibility of blocking a sensor when swinging an arm. The area and directions covered by the ultrasonic sensor layout are illustrated in Figure 3.

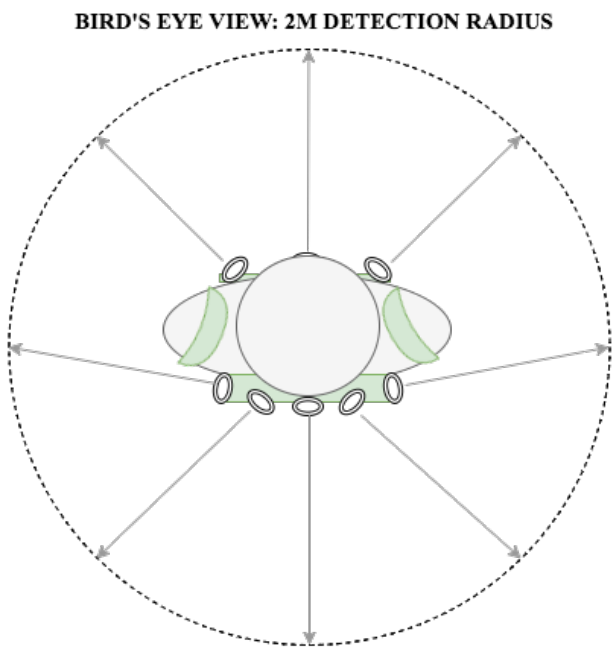

Figure 3: 360 degree utilization of the ultrasonic sensors affixed to the harness

The power module and the application processor will be integrated into the slim, rigid pack on the back of the harness. Their wire connections to the rest of the peripherals (to deliver data and power) will be reinforced through rigid cabling to prevent the wiring from being easily breakable. The power module specifically will be waterproofed to prevent rain splashes from damaging the control circuitry, and the battery will be thermally insulated to ensure maximum safe usage.

The haptic belt will integrate the entire haptic module. The 8 ERM motors and their respective drivers will be affixed around the circumference to mirror the ultrasonic sensor layout.

This physical design aims to be intuitive and hassle-free to put on: the user will first slip on the harness through the arm holes, clip on the front-facing strap to close and secure the harness, then clip on the belt dangling from the back of the harness to close and secure the belt (clips are the yellow squares in Fig. 2).

Additionally, one of our requirements for the control module is to not produce feedback for objects within 20 cm. This is a physically-motivated requirement to prevent delivering feedback if a user's arm unintentionally blocks a sensor while swinging their arms , or if the user is sitting on a chair or leaning against a wall.

2.3 Functional Overview

In this section, we describe each of our functional blocks in detail.

2.3.1 Sensor Module

The sensor module includes all components that provide inputs to our system. This includes 8 ultrasonic range sensors, a temperature sensor, a 3-axis magnetometer, and a control panel.

Overall block interface:

- Inputs: 5V, 3.3V, control bits from the application processor
- Outputs: Digital, PWM, I2C and analog signals to the application processor

Ultrasonic Sensors The primary data inputs of our wearable device come from the 8 ultrasonic sensors arranged around the torso of the user. Each sensor periodically obtains data about the distance of the closest object, and delivers it to the application processor. Each sensor has a two-wire external digital interface with active high 5V signaling: one output wire for ultrasonic transmission, and one input wire for detecting a response. To perform a distance measurement, the sensor's transmit pin is pulsed by the application processor for 10μs. The sensor then outputs a series of ultrasonic pulses; when an echo is detected, the sensor drives the receive pin high as shown in Figure 4. By measuring the delay between the chirp and echo, the application processor can calculate the distance. Measurement and characterization of the ultrasonic sensors can be found in Section 2.5.

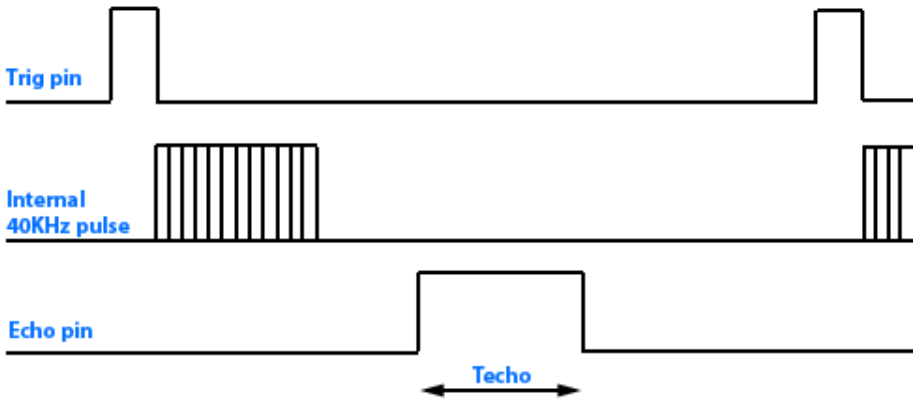

Figure 4: A cycle of distance measurement by an ultrasonic sensor [8]

To reduce interference between sensors, the controller will sample one sensor at a time. The outputs of all eight sensors are thus multiplexed into the application processor on one pin to reduce the number of IO pins required to support all 8 sensors.

Interface:

- Inputs: 5V, 1-bit digital trigger signal from application processor
- Outputs: 1-bit digital echo signal to application processor

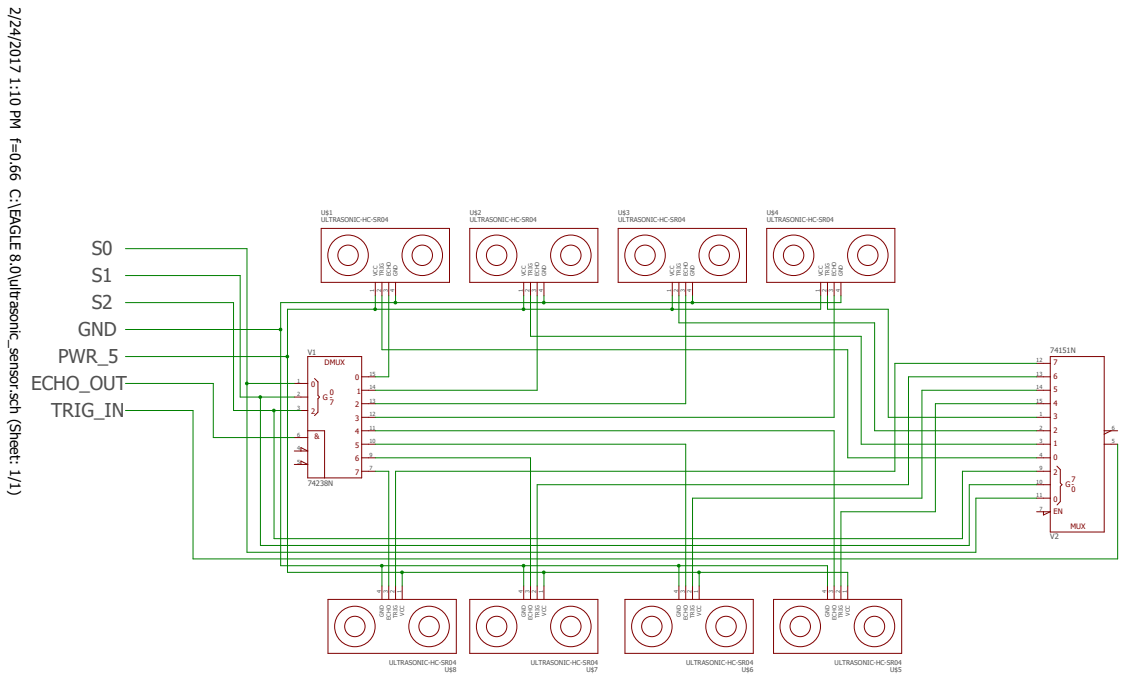

Figure 5: Ultrasonic sensor schematic

Temperature Sensor Because the propagation delay from the sensor to object depends on the air temperature, we also include an analog temperature sensor. This will be read by the application processor using its integrated analog-to-digital converter.

Interface:

- Inputs: 3.3V
- Outputs: Analog signal to application processor

Magnetometer Using a three-axis magnetometer IC enables our device to give absolute orientation feedback to the wearer. The magnetometer will communicate to the application processor using an I2C bus. Because we only include 8 haptic ERMs in our design, our detection of geomagnetic north needs to be accurate to within 22.5˚. With 22.5˚, we will have enough resolution to activate the correct ERM motor.

Additionally, we will be able to know if geomagnetic north lies between two motors and need to activate both.

Interface:

- Inputs: 3.3V
- Outputs: I2C bus to application processor

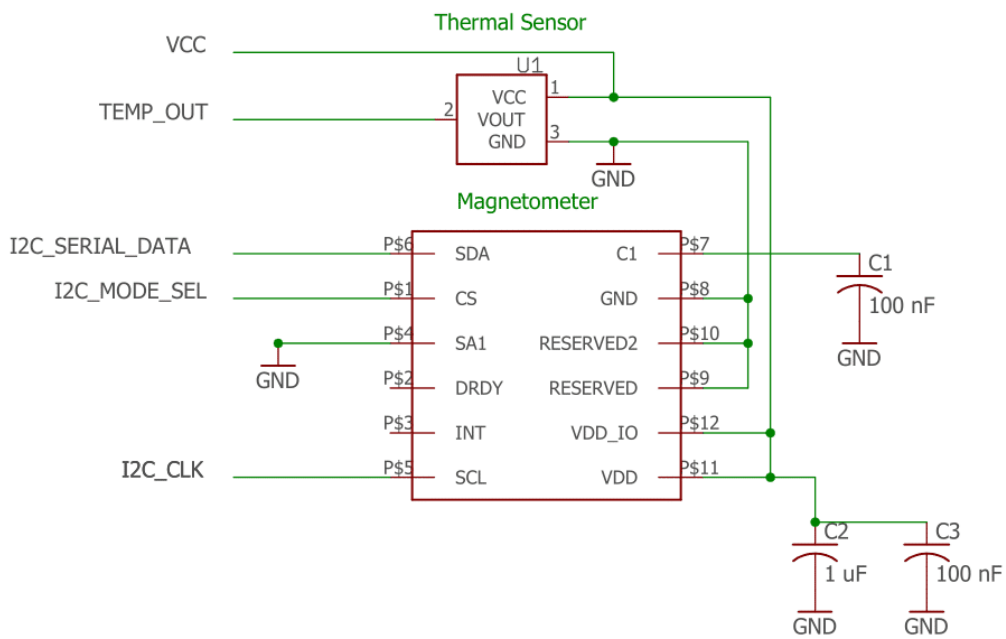

Figure 6: Magnetometer and temperature sensor schematic

Control Panel The control panel will contain the master power switch, allow the user to control the modes of operation, and allow the user to adjust the range sensitivity of the ultrasonic sensors. The control panel will have three rocker button switches: one to power on/off the wearable device, one to enable geomagnetic feedback, and one to enable proximity feedback. The panel will also have a rotary dial to control the intensity of the proximity sensors. The switches will connect to GPIO inputs of the application processor, and the sensitivity potentiometer in the rotary dial will output an analog signal to the application processor that will be interpreted by the integrated ADC. These switches will be soldered to a simple multi-purpose PC

board. It will be contained in an enclosure to ensure protection from the elements.

Interface:

- Inputs: 5V, power switch (from user), geomagnetic switch (from user), proximity switch (from user), rotary dial (from user)
- Outputs: 2 1-bit signals to application processor, 1 analog signal to application processor

2.3.2 Haptic Module

The haptic module is responsible for generating all haptic feedback to the user. There will be 8 eccentric rotating mass (ERM) modules arranged around a belt worn around the midsection. Each of them will be controlled by an ERM motor controller, and all ERM motor controllers will be controlled by the 8-channel PWM driver. Each component is described in the following sections.

Overall block interface:

- Inputs: I2C from the application processor for updating the ERM intensity, 3.3V supply from the power module
- Outputs: None

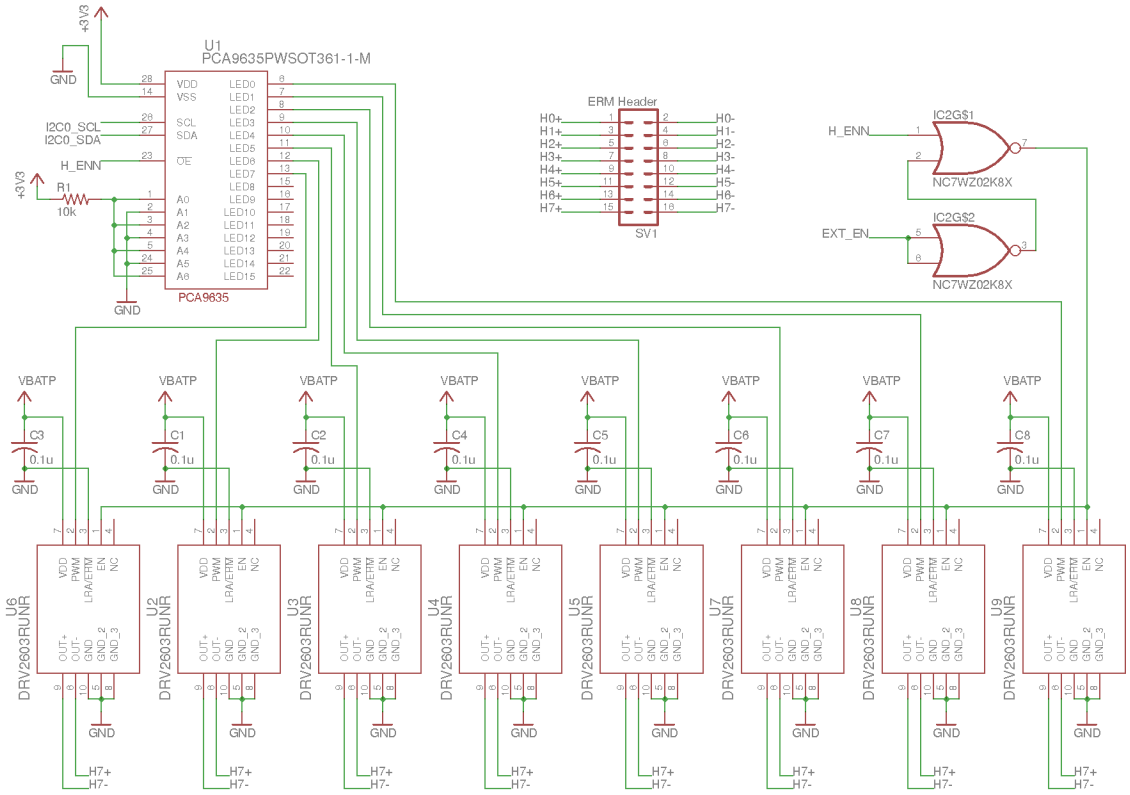

Figure 7: Schematic for the Haptic Module

8-Channel PWM Driver In order to drive the 8 haptic feedback motors with our application processor, we will be using the NXP PCA9635PW to provide 8 free-running PWM 3.3V channels for controlling the 8 haptic motor drivers. The PWM duty cycle of each channel is controlled using an 8-bit data register, providing 256 different levels of duty cycle. The PWM frequency is fixed at 97kHz.

The PWM driver supports a 1Mb/s I2C interface, will be programmed using the transaction diagram below. The IC supports fully programmable 7-bit I2C address, which in our design will be set to 0x1010101. The IC supports an auto increment feature, so all 8 channels can be updated with only 10 Bytes of data.

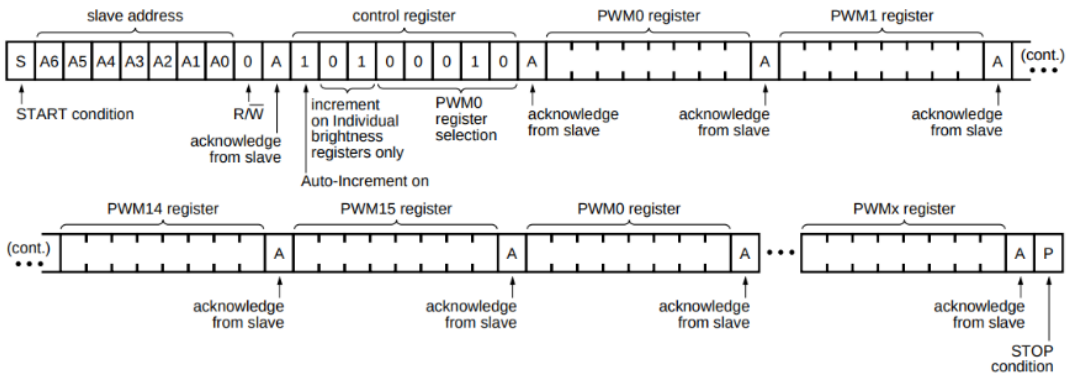

Figure 8: I2C Transaction [9]

Interface:

- Inputs: 3.3V, I2C from the application processor
- Outputs: 8 free-running 3.3V PWM outputs running at 97 kHz

ERM Motor Controller The 8 ERM motor controllers are used to provide greater control of the ERM intensity. Rather than driving the motors directly with a PWM signal, we are using these controllers because they perform acceleration and active braking. This means the ERM actuators will respond with lower latency.

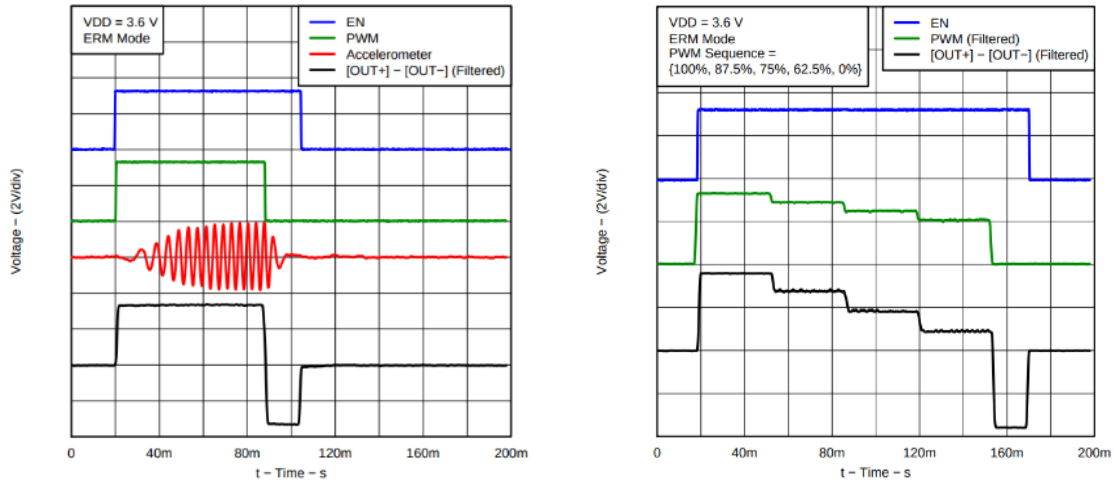

(a) Acceleration

(b) Active braking

Figure 9: Acceleration and active braking [10]

Each controller takes a PWM signal in and outputs a duty cycle to the corresponding ERM. 50% duty cycle

corresponds to motor off, 0% to full reverse, and 100% to full forward, as illustrated in the left plot of Figure 9. The right plot of Figure 9 shows how active braking is handled by the controller IC. Once the PWM duty cycle reaches 50% (corresponding to a stopped ERM), the polarity of the ERM drive voltage is momentarily reversed. This serves to quickly stop the ERM, causing a more abrupt and precise haptic transition.

Interface:

- Inputs: 3.3V 97 kHz PWM signal (with duty cycle encoding direction and intensity), power supply directly from battery
- Outputs: Analog signal to directly drive an ERM.

Mini ERM Actuators The 8 ERM actuators (commonly called rumble motors) are responsible for generating haptic feedback to the user. They will be affixed to the haptic belt worn about the user's midsection.

Interface:

- Inputs: Digital signal from 8-channel PWM driver
- Outputs: None

2.3.3 Control Module

The control module is responsible from reading all data from the sensor and power modules, and sending the appropriate commands to the haptic module. It consists of a ARM Cortex-M4 processor with the following interfaces:

- I2C interface to control the haptic module and read the magnetometer
- 4 ADC channels with 10-bit resolution
  - Ambient Temperature (thermistor)
  - Battery Temperature (thermistor)
  - Haptic Intensity Adjustment Potentiometer
  - Battery Voltage
- 9 GPIO Pins

- 2 for the mode switches (Proximity ON/OFF, and direction ON/OFF)
- 3 for ultrasound multiplexers select
- 2 for ping and echo from ultrasonic sensor multiplexers
- 2 for battery charger status

Feedback Modes

1. The control module will provide three modes of haptic feedback, which may be superposed: Continuous localized -- each motor is intensity independent and continuous in time. Used in proximity mode to report the distance to an object in a given direction
2. Pulsed localized -- Only one or two motors active, pulsing on or off at an arbitrary rate. This is used in cardinal mode to report which direction is north. Two motors may be active when the direction north falls between two ERM's
3. Pulsed global -- All motors pulse on and off at the same arbitrary rate and pattern. This mode is used to communicate the following system conditions:
   (a) Battery is low -- 1 pulse every 4 seconds
   (b) System is charging -- 1 pulse every second
   (c) System is fully charged -- 2 pulses every second
   (d) System is shutting down due to battery overheating -- 1 long 1 second pulse

Software Flow Charts Below are two flowcharts, one for the main thread and the other for the ultrasonic sensor thread.

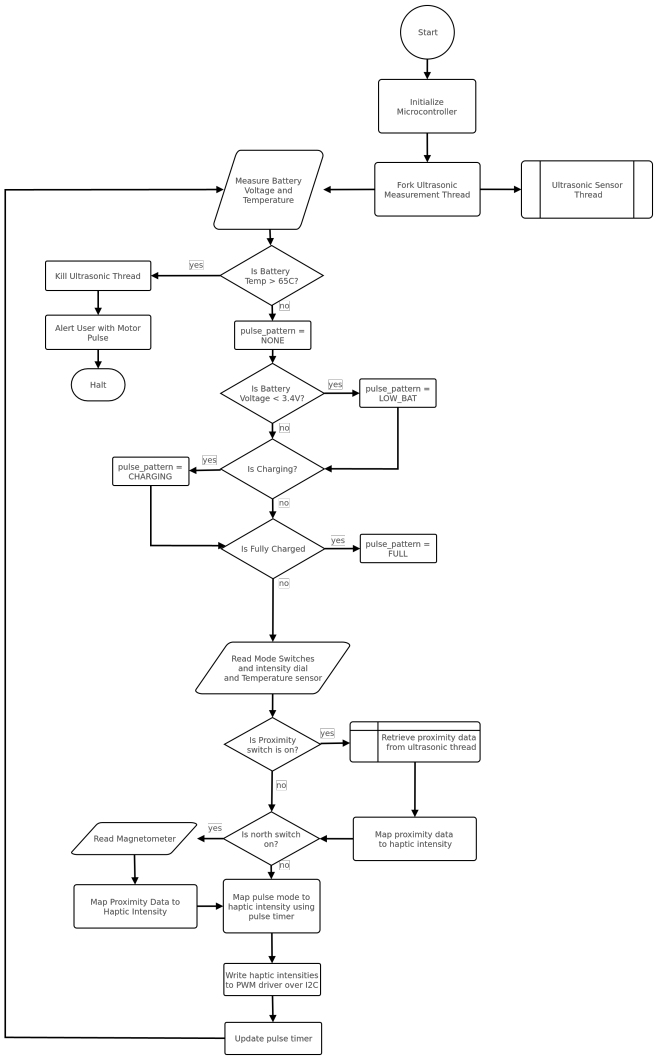

Figure 10: Main thread flow chart

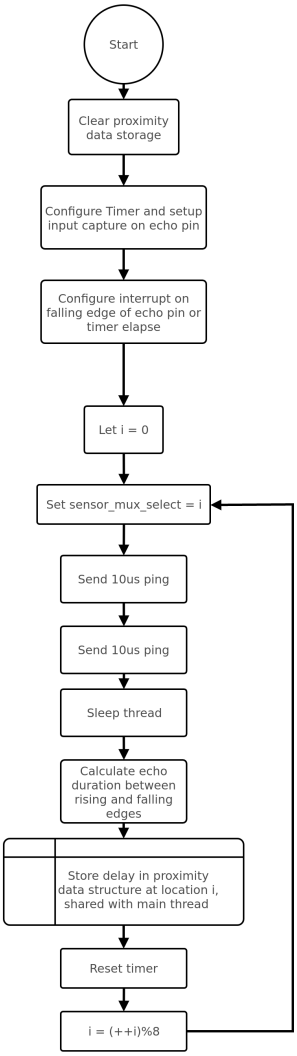

Figure 11: Ultrasonic sensor thread flowchart

An ARM Cortex-M4 will be used as the microcontroller for this project. It consists of an application processor and board, as well as the software to convert sensor data into haptic responses. The mode switch on the control panel will tell the control module whether it should provide feedback for obstacle detection, cardinal direction, or both. The control module will read the intensity adjustment knob on the control panel and adjust the haptic commands sent to the haptic module accordingly. The application processor will control the rangefinders through a multiplexer/demultiplexer pair using its GPIO pins. In order to get accurate time-of-flight measurements, interruptible timers integrated into the application processor will be used.

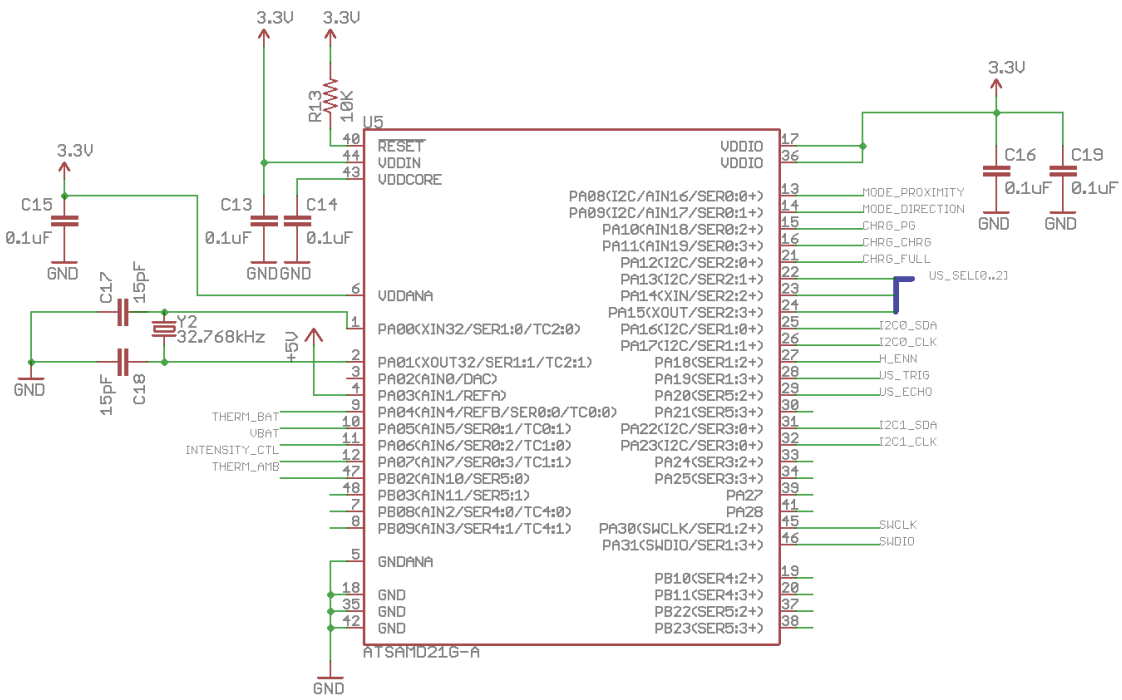

Figure 12: Eagle Schematic for the Control Module

2.3.4 Power Module

The power module provides the Lithium-ion battery for the wearable device and delivers the necessary operating voltages for other modules. It also mitigates the power hazards with regards to user safety with a hazard detection unit, specifically for thermal protection and undervoltage lockout. Finally, it uses a charging IC for the rechargeable Li-ion cell.

In addition, the user must be alerted through the haptic module if the device is in danger of shutting down to prevent hazards, since it will risk leaving the user without mobility aid. Therefore, the power module also outputs data about the current temperature of the battery to the application processor through an analog signal. Finally, the application processor also tracks the voltage of the battery to alert the user about low-power state.

Interface:

- Inputs: None
- Outputs: 5V power supply, 3.3V power supply, VBATP analog signal to the application processor, VTHERM analog signal to the application processor

Voltage Regulator Unit The voltage regulator unit will deliver low-voltage DC power to the rest of the modules. The two required operating voltages are 3.3V and 5V, and our chosen Li-ion cell has a nominal voltage of 3.7V: therefore, we need to both step down and step up the battery voltage. To step down the voltage to 3.3V, we will use the LM3671 DC-DC step down converter; to boost the voltage to the 5V range, we will use the TPS61032 boost converter. Both components exhibit efficiency of greater than 90% power conversion and therefore mitigate power loss, an important quality for a wearable device.

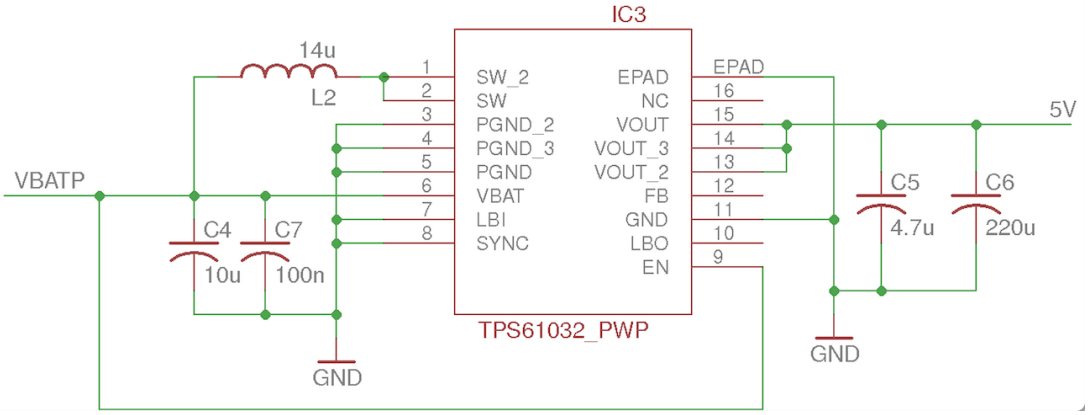

Figure 13: EAGLE schematic for the Voltage Regulator Unit

Additionally, the voltage regulators must be disabled if the battery condition becomes hazardous during usage to protect the user. Their enable pins are thus connected to EN_EXT, a digital output from the hazard detection unit which will be asserted high only if the current battery state is non-hazardous, and de-asserted otherwise.

Interface:

- Inputs: Input voltage from Li-ion battery, digital signal from hazard detection unit
- Outputs: 3.3V and 5V voltage rails

Hazard Detection Unit The hazard detection unit monitors for hazardous battery conditions that may manifest during normal usage. In such conditions, it will de-assert the EN signal to the voltage regulator unit to isolate the power module from the rest of the system. The battery is in a hazardous state if one or both of the following hazard conditions are true: if the battery is thermally unsafe, or if the battery's voltage is too low. Both conditions impact user safety and battery longevity.

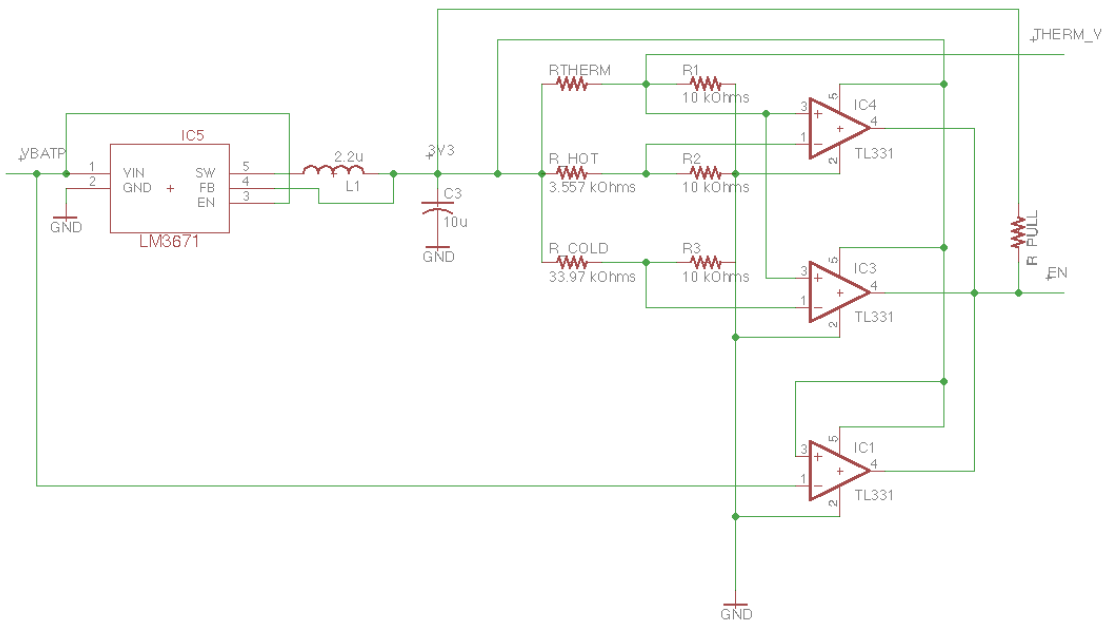

Figure 14: EAGLE schematic for Hazard Detection Unit

The Li-ion battery is hazardous if its temperature exceeds the range of 0 to 50 degrees Celsius. To monitor this temperature, we thermally glue a negative temperature coefficient (NTC) thermistor to the Li-ion battery: our chosen thermistor (NTCLE213) will have an impedance of 33.97 kΩ at 0 degrees Celsius and 3.557 kΩ at 50 degrees Celsius. The variable voltage input to the comparators is therefore the voltage drop across R1 (V_THERM), which will scale proportionally with the thermistor's changing impedance. We provide reference voltages for the 50 degrees C and 0 degrees C boundaries as the other comparator inputs respectively. We choose the following resistor values: R_HOT = 3.557 kΩ, R_COLD = 33.97 kΩ, and R1 = R2 = R3 = 10 kΩ. Using a 3.3V voltage supply (obtained with another LM3671 DC-DC Step Down Converter connected to the battery) for the circuit, we can calculate the comparator inputs:

$$V_{HOT} = I_{HOT} * R_2, \text{where } I_{HOT} = \frac{3.3}{R_{HOT}+R_2}$$

$$V_{COLD} = I_{COLD} * R3, \text{ where } I_{COLD} = \frac{3.3}{R_{COLD}+R_3}$$

We find that V_HOT = 2.4V and V_COLD = 0.75V, which are well within the requirements of the TL331 differential comparator.

The third comparator monitors for under-voltage; it uses the Li-ion battery's voltage as the variable voltage and the 3.3V voltage source as the reference voltage. The Li-ion battery that we chose (ICR18650) has a nominal voltage of 3.7V, and a discharge voltage of 3.0V. Since the discharge voltage is when the battery is

fully depleted and any further depletion will risk potential hazard, we conservatively leave a margin of 0.3V for our comparison. Moreover, Li-ion batteries remain at >3.4V for >90% of their discharge, and therefore the under-utilization of our battery is non-significant. In addition, allowing the Li-ion battery to have voltage < 3.3V will cause our 3.3V voltage rail to sag, an undesirable outcome that this comparison also mitigates.

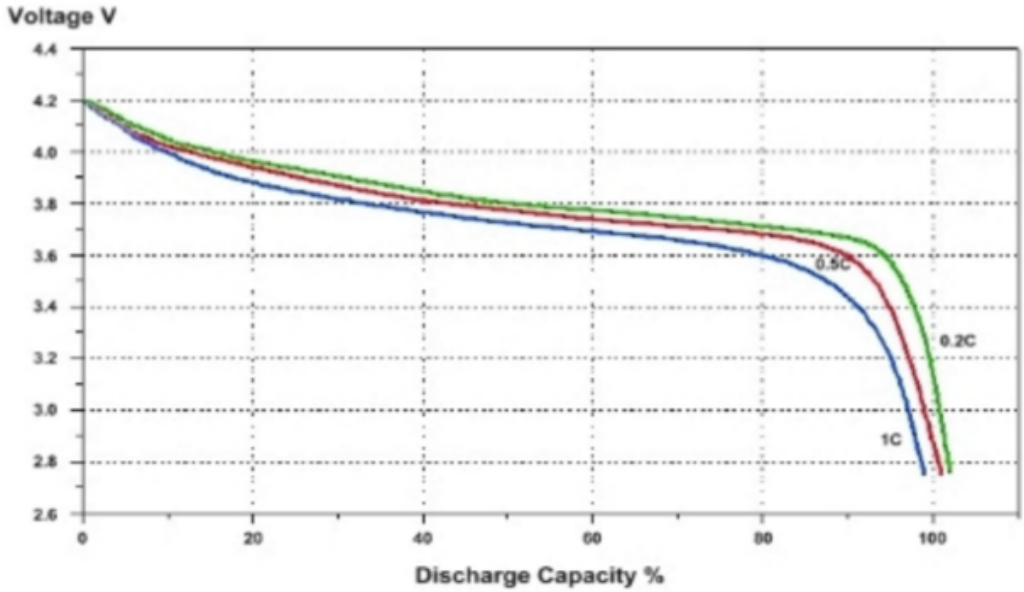

Figure 15: Typical discharge graph of a 1S Lithium-ion battery at 25 degrees C [11]

The outputs of the three comparators are joined with a pull-up resistor that connects to the 3.3V voltage source. Since the TL331 comparator has an open collector output, if one or more comparators are active, they will sink current and the combined output will be pulled to ground. This combined output is the EN_EXT signal that is delivered to the enable pins of the voltage regulators. Since the voltage regulators are in shutdown mode if EN < 0.4V and in normal operating mode if EN > 1V, and our EN_EXT signal will output GND if one or more comparator matches and 3.3V otherwise, this design satisfies the requirements.

V_THERM is also delivered as the analog signal to the application processor, which will allow the application processor to alert the user if battery is overheating or nearing depletion.

Interface:

- Inputs: Input voltage from Li-ion battery
- Outputs: Digital EN_EXT signal to the voltage regulator unit, V_THERM analog signal to the application processor

Charging controller Charging the Li-ion battery is another area that poses significant safety concerns. Since we are increasing voltage of the battery cell, we must ensure that the battery cell will not exceed the maximum safe voltage of 4.2V, and that charging will not cause overheating of the battery cell.

The necessary qualifications for a charging IC are the following:

- **Correct charging algorithm**: Charge at constant current (0.2C to 0.7C depending on the manufacturer of the battery) until the battery reaches 4.2Vpc (volts per cell); then hold the voltage at 4.2V until the charge current has dropped to 10% of the initial charge rate, at which point terminate charging.

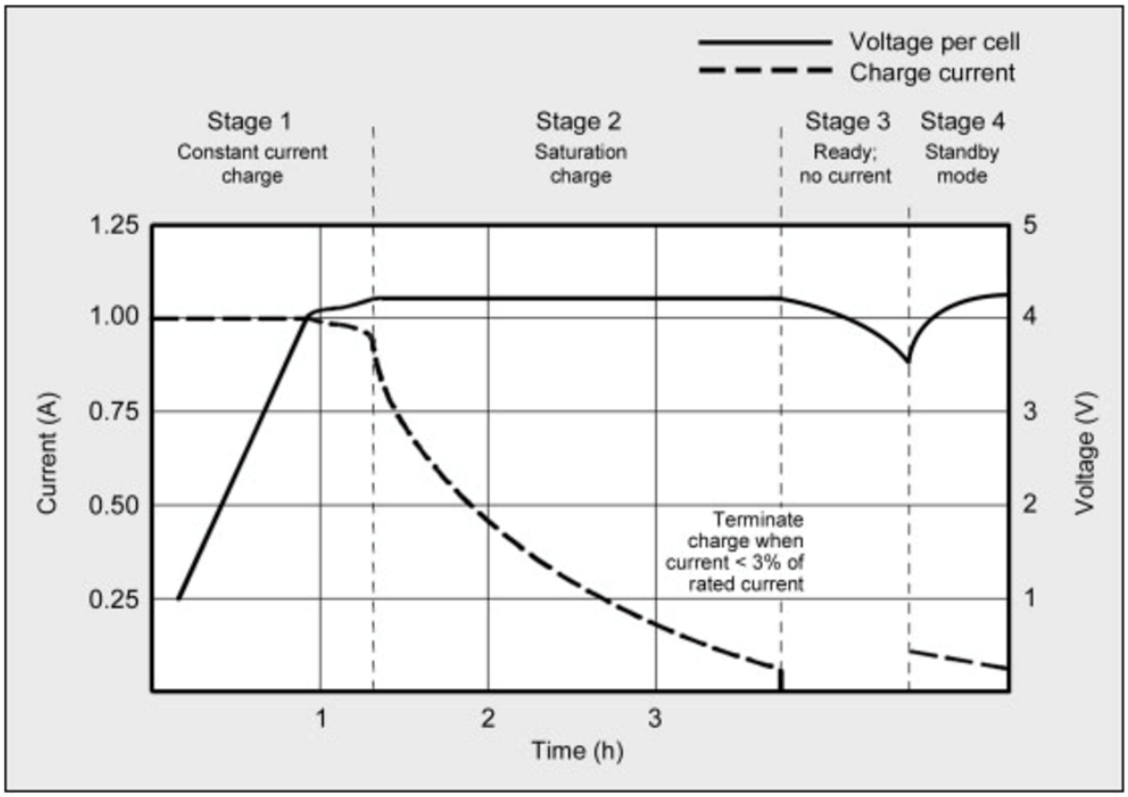

Figure 16: Typical charge current behavior over time for a 1S (3.7V) Li-ion battery

- **Overcharge protection**: Stop charging when Vpc rises above 4.2V.
- **Reverse discharge protection**: Prevent charging when charging supply polarity is reversed.
- **Thermal regulation**: Stop charging if battery temperature is lower than 0 degrees Celsius or above 45 degrees Celsius.
- **Overcurrent protection**: Charge current must be below 0.7C.

We choose MCP73833/4, a configurable charging IC that has all of the listed features. We select the following configuration for the MCP73833/4 to suit our chosen Li-ion battery, Adafruit's ICR18650:

- Constant charging current: 0.5C = 2200mA
- Constant charging voltage: 4.2V
- Cut-off current: 0.01C = 44mA

Additionally, we elect to use a DC barrel jack to provide external voltage supply to our charging controller. The assembled schematic is as follows:

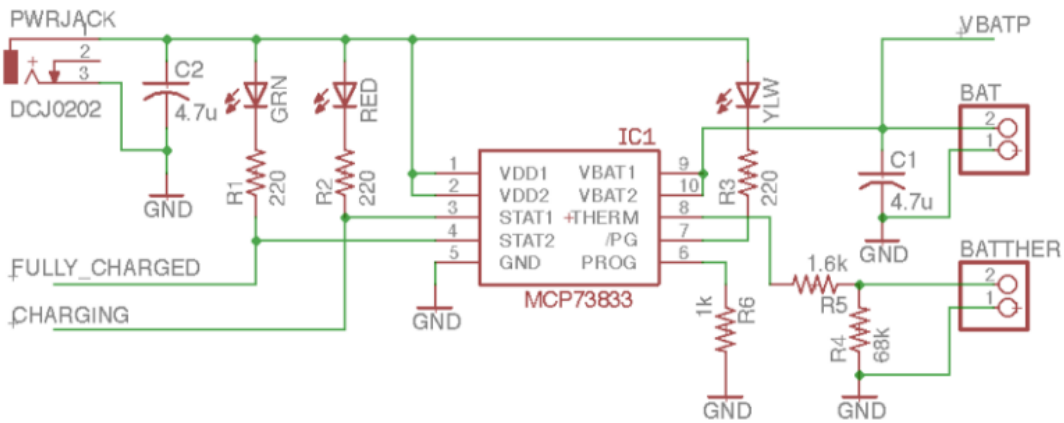

Figure 17: EAGLE schematic for charging IC MCP73833/4

Interface:

- Inputs: 6V from DC power jack
- Outputs: 2200mA charge current to the Li-ion cell

Lithium-ion Battery We choose to use Lithium-ion battery for our wearable device due to its high density and portability; it is more suitable for wearables compared to other chemical batteries such as lead acid. To determine the size of the Li-ion cell suitable for our device, we use datasheet values to calculate approximately how much power our components draw:

$$Total\ Power = \sum Voltage * Current$$

Component	Quantity	Average Power Consumption/Component
Ultrasonic Rangefinder	8	5V * 15mA = 75 mW
Total Power Consumed by Module	75 mW (only one sensor is triggered at a time)	

Table 1: Average Power Consumption per Component for Sensor Module

Component	Quantity	Max Power Consumption/Component
ERM Controller and Motor	8	3.6V * 59 mA = 212.4 mW
PWM Driver	1	3.3V * 10 mA = 33 mW
Total Power Consumed by Module	8(212.4) + 33 = 1732.2 mW	

Table 2: Average Power Consumption per Component for Haptic Module

Component	Quantity	Max Power Consumption/Component
Microprocessor	1	3.3V * 7.3 mA = 24.09 mW
Total Power Consumed by Module	24.09mW	

Table 3: Average Power Consumption per Component for Control Module

As for the power module, the voltage regulators are 90%+ efficient and dissipate negligible power, the differential comparators and thermistors draw negligible power, and the charging IC and DC power jack will draw power from an external power supply. Therefore, the power impact of the power module is insignificant.

We find through our analysis that our device consumes an approximate 0.5043Ah. We choose to use Adafruit's ICR18650 Li-ion single cell battery, which is rated at 4.4Ah with standard discharge of 0.2C = 880mA. We will require a discharge rate of 0.115C to accommodate our device, and therefore one ICR18650 will yield 8.7 hours of battery. Thus, one ICR18650 will be able to guarantee our user a full 8 hours of battery capacity for a typical day's use.

Interface:

- Inputs: 4.2 charging voltage from charging IC
- Outputs: power supply line to the rest of the power modules, VBATP (positive terminal) to analog processor

2.4 Block Requirements

2.4.1 Sensor Module

Ultrasonic Sensors	
Requirement	Verifications
1. Ultrasonic sensors must be accurate to within 20cm	1. Setup ultrasonic sensor a distance of 20cm to a wall 2. Record distance calculated 3. Repeat measurement every 20cm until a distance of 2m is reached. 4. Verify all measurements are within 20cm of true distance
2.Ultrasonic sensors must have an effective range of 2m	1. Place ultrasonic sensor a distance of 150cm from a wall. 2. Record distance calculated 3. Move sensor away from the wall by 10cm and record distance calculated again 4. Repeat step 3 until a distance of 2m has been reached. 5. Verify that at 2m distance, the calculated distance is accurate and upholds Requirement 1

Table 4: Ultrasonic Sensors Requirement and Verifications

Temperature Sensor	
Requirement	Verifications
Must be able to sense from -10°C to 30°C with a 5°C accuracy.	1. Find three areas of known temperature (inside, outside, refrigerator) 2. Take 10 temperature measurements in each location separated by 1 minute 3. Ensure temperature has stabilized (device has reached ambient temperature) 4. Verify stabilized temperature within 5 degrees of true temperature

Table 5: Temperature Sensor Requirement and Verifications

Magnetometer	
Requirement	Verifications
Must be able to sense geomagnetic north within a 22.5˚ accuracy.	1. Determine geomagnetic north using a compass or other tool 2. Record north direction given by magnetometer 3. Rotate device 22.5 degrees and remeasure 4. Verify all recorded measurements are within 22.5 degrees geomagnetic north

Table 6: Magnetometer Requirement and Verifications

2.4.2 Haptic Module

Haptic Module	
Requirement	Verifications
Each ERM must not draw more than 150 mA when supplied with 3.3V	1. Using a lab power supply apply 3.3V to the motor. 2. Verify that the lab supply is sourcing less than 150mA
ERM must be able to support both continuous operation and pulsed operation of 10% duty cycle at 2 Hz. These two modes must be able to be distinguished by their haptic response.	1. Apply a 10% duty cycle 3.3V PWM signal at 2Hz with a signal generator. 2. Allow a blindfolded person feels the response. 3. Apply a continuous 3.3V signal to the ERM. 4. The test subject should be able to differentiate between pulsed and continuous modes.
PWM Driver must be able to update all 8 channels' duty cycles at least once every 200 ms.	1. Create a test program to alternately turn all PWM motors full on and full off. 2. Flash the program to the device 3. With an oscilloscope, measure the voltage across the ERM with time. 4. The test pases if the the delay between changes for a given motor is < 200ms.

Table 7: Haptic Module Requirements

2.4.3 Control Module

Control Module	
Requirement	Verifications
When board is powered on a full battery with both proximity and directional feedback off, no motors should be running.	1. Fully charge the battery 2. Turn off the proximity and direction feedback switches on the control panel. 3. Monitor the I2C bus output to the haptic module with a logical analyzer. 4. Verify all data bytes are 0x80, corresponding to 50% duty cycle (motors off).
The end to end latency between a proximity sensor being read to a motor turning on needs to be less than 200ms.	1. Fully charge the battery 2. Attach a single proximity sensor. 3. Monitor both the echo pin and the I2C bus on the logic analyzer. 4. Set the scope trigger on the falling edge of the echo pin, and set the timespan to be > 250ms 5. Trigger the sensor with a large flat object, and record the delay until the haptic command is send on the I2C bus.

Table 8: Control Module Requirements and Verifications

Control Module Continued	
Requirement	Verifications
The processor must refresh the duty cycle of all 8 PWM channels at least once every 200 ms.	1. Fully charge the battery 2. Attach logic analyzer to the I2C bus between haptic and control module. 3. Turn on device, and measure the delay between writes of the 4. I2C address If this delay is $<$ 200ms, the test passes.
When an object is placed less than 20cm of a sensor, the ERM corresponding to that sensor must be turned off.	1. Fully charge the battery 2. Attach logic analyzer to the I2C bus between the haptic and control module 3. Turn on the device. 4. Place obstruction between 30cm and 100cm in front of ultrasonic range sensor 5. Verify that the data byte sent to the PWM controller is $>$ 0x80 6. Move obstruction to within 20cm of the sensor. 7. Verify that the data byte sent to the PWM controller is 0x80

Table 9: Control Module Requirements and Verifications

2.4.4 Power Module

To model the load for the 3.3V and 5V regulators, we use the power analysis in the previous section to determine the approximate current that each regulator delivers. We find that 5V primarily delivers 15mA to the ultrasonic sensors. We find that 3.3V primarily delivers 17.3 mA to the PWM driver and the microcontroller.

Voltage Regulator	
Requirement	Verifications
Handle input voltage range of 3.3V-4.2V from the battery, and output stable voltage rails of 3.3V @ 18 mA and 5V @ 15 mA	1. Set the voltage supply to 3.3V and connect the voltage supply to the input of the regulator unit 2. Attach a 184 kΩ resistor as the load of the 3.3V rail, and a 334 kΩ resistor as the load of the 5V rail 3. Verify with a voltmeter that the voltage drop across the 184 kΩ resistor is 3.0-3.6V, and that the voltage drop across the 334 kΩ resistor is 4.7-5.3V 4. Repeat step 2 and 3 for every 0.1V increment of the voltage supply until 4.2V is reached

Table 10: Voltage Regulator Requirements and Verifications

Normal Usage Safety	
Requirement	Verifications
Stop battery discharge if battery temperature exceeds 50 ^{o}C	1. Put the battery in a fireproof bag 2. Attach a 184 kΩ resistor as the load of the 3.3V rail, and a 334 kΩ resistor as the load of the 5V rail 3. Bring an oven to 51 ^{o}C and place the bag inside 4. Wait 3-5 minutes until the battery reaches 51 ^{o}C 5. Verify with a voltmeter that the voltage drop across both resistors are approximately 0V-0.005V.
Stop battery discharge if battery temperature drops below 0°C	1. Put the battery in a fireproof bag 2. Attach a 184 kΩ resistor as the load of the 3.3V rail, and a 334 kΩ resistor as the load of the 5V rail 3. Put the bag in a bucket of water and ice 4. Wait 3-5 minutes until the battery reaches 0°C 5. Verify with a voltmeter that the voltage drop across both resistors are 0V-0.005V.
Stop battery discharge if battery voltage falls below 3.3 volts per cell	1. Let the battery deplete to around 3.4 volts per cell 2. Attach a 184 kΩ resistor as the load of the 3.3V rail, and a 334 kΩ resistor as the load of the 5V rail 3. Connect a voltmeter across the cell 4. Verify that the voltage drop across both resistors are 0V-0.005V when the battery voltage $<$ 3.3V 5. Leave the apparatus alone for at least an hour 6. Verify that the battery voltmeter still displays 3.3V

Table 11: Normal Usage Safety Requirements and Verifications

Charging	
Requirement	Verifications
Deliver charge current of 0mA when Vpc rises above 4.2V or if charge current becomes ˜0.1C = 44mA	1. Let the battery cell deplete to < 4.0V 2. Connect a voltmeter across the battery cell 3. Connect the charging IC's power jack to a 6V power supply 4. Probe the charging IC output with an ammeter, and verify that charging current becomes 0-0.05 mA if either Vpc > 4.2V or if charge current is within the range of 35 mA to 50 mA
Must deliver charge current of 0mA when charging supply polarity is reversed	1. Let the battery cell deplete to < 3.5V 2. Reverse the connection of the lead lines of the battery on the charging IC 3. Connect the charging IC's power jack to 6V power supply 4. Probe the charging IC output with an ammeter, and verify that charging current is 0-0.05 mA
Must deliver charge current of 0mA if battery temperature is above 45 ºC	1. Let the battery cell deplete to < 3.5 V 2. Put the battery in a fireproof bag 3. Connect the charging IC's power jack to a 6V power supply 4. Bring an oven to 51 ºC and place the bag inside 5. Wait 3-5 minutes until the battery reaches 51 ºC 6. Verify with an ammeter that the current output of the charging IC is 0-0.05 mA.

Table 12: Charging Requirements and Verifications

Charging Continued	
Requirement	Verifications
Must deliver charge current of 0mA if battery temperature is lower than 0 ºC	1. Let the battery cell deplete to < 3.5V 2. Put the battery in a fireproof bag 3. Connect the charging IC's power jack to a 6V power supply 4. Put the bag in a bucket of water and ice 5. Wait 3-5 minutes until the battery reaches 0ºC 6. Verify with an ammeter that the current output of the charging IC is 0-0.05 mA.
Must deliver charge current of at most 0.7C = 3080mA at all times	1. Let the battery cell deplete to ˜3.3V 2. Connect the charging IC's power jack to a 6V power supply 3. Record the charge current output of the charging IC until charging terminates 4. Verify that charge current never exceeded 3080mA-3200mA

Table 13: Charging Requirements and Verifications

Lithium-ion Battery	
Requirement	Verifications
Battery pack must last at least 8 hours for all the components on the device	1. Charge the battery pack until charging terminates 2. Connect battery to rest of the device 3. Leave it running with a rotating apparatus, such that the device is continuously drawing power to reflect normal usage 4. Leave it running for 8 hours 5. Use the device to verify it is fully functional after 8 hours

Table 14: Lithium-ion Battery Requirements and Verifications

2.5 Tolerance Analysis

In our design, perhaps the most important aspect is the ultrasonic sensor array. Our design requires that they produce accurate data. If the data is not reliable, our device is useless.

There are many ways that the data can be skewed or incorrect. In this sensitivity analysis, we will investigate how inherent sensor inaccuracies, air temperature variations, target angle variations, target composition, and walking speed can affect calculated distance. Knowing sensor limitations is very important for ensuring appropriate usage.

2.5.1 Inherent Sensor Inaccuracies

In order to model inherent sensor inaccuracies, we took many measurements of a flat, highly reflective object at various distances. Starting at 20cm, we took greater than 200 round trip time samples and increased the distance by 10cm until 1m was reached. From this data, we can create an error model in order to understand and potentially factor out deterministic error in our sensors.

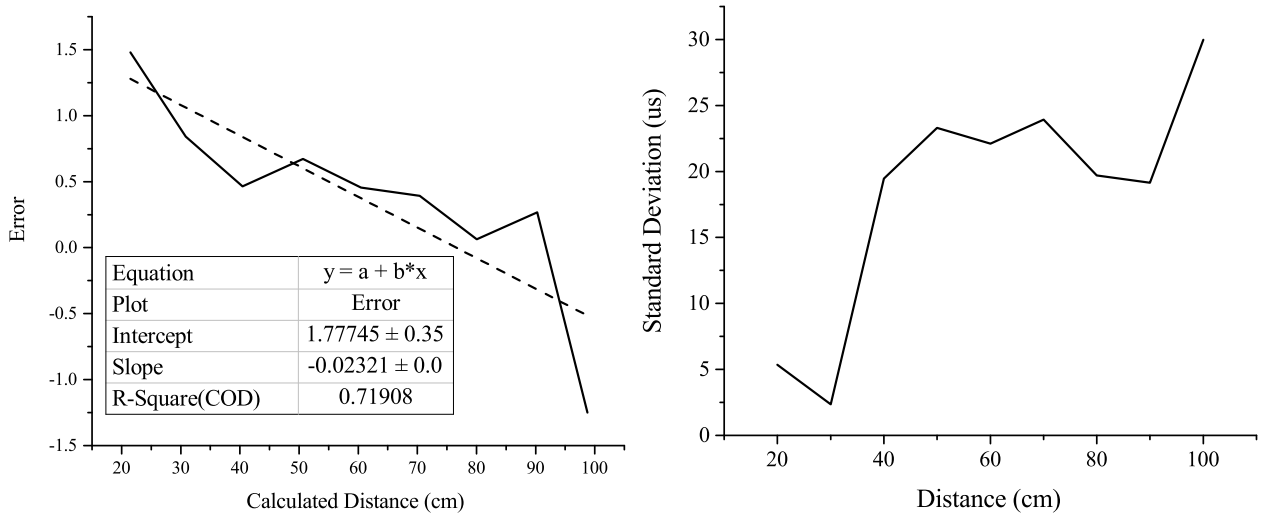

(a) Error as a function of measured distance

(b) Standard deviation as a function of true distance

Figure 18: Sensor data as function of distance

From this model we can extract a linear error model containing first order and constant terms. This plot is error as a function of calculated distance, so we can simply subtract the error from our calculated distance to obtain a more accurate measurement.

2.5.2 Air Temperature Variations

As the temperature of a medium changes, the speed of sound in that medium changes as well. For air, a rough approximation is given as follows [12]:

$$V_{sound} = 331 + 0.6 * T(^{o}C) \tag{1}$$

Over the device's usable temperature range, 0ºC to 50ºC, the speed of sound will vary. At the devices maximum operating range of 2m, this effect will be at its worst. At 0ºC, we expect a round trip ping time of 12ms, and at 50ºC, we expect a round trip ping time of 11ms. If our application processor assumes a constant speed of sound $V_{sound} = 340$m/s , our calculated distance will vary from 1.87m to 2.04m.

While this effect is not great, it is our greatest source of correctable error. In order to account for it, a temperature sensor will be used to obtain a more accurate speed of sound. We require the temperature sensor to be accurate to within 5ºC of the true air temperature.

Our measured round trip ping time at a distance of 2m is given as

$$t = 2\left(\frac{2}{V_{sound}(T)}\right)$$

where $V_{sound}(T)$ is Equation 1, and T is temperature in ºC. Our calculated distance is given by

$$d = \frac{2V_{sound}(T + \Delta T)}{V_{sound}(T)}$$

where ΔT is our measured temperature error. Finally, error is given by

$$error(T) = 2\left(\frac{V_{sound}(T + \Delta T)}{V_{sound}(T)} - 1\right)$$

Assuming a worst case ΔT of 5ºC, we expect worst case error to be 1.8cm at 0ºC which is an acceptable error.

2.5.3 Target Angle Variations

A flat object will reflect away a lot of the ultrasonic pulse if it is at an angle to the direction of the signal. A surface normal to the signal will produce the best return, and diminishing reflections with increasing angle. In order to determine the severity of this effect, we measured a flat object at 50cm over various angles.

Table 15: Average calculated distance at various angles

Angle	Average Calculated Distance (cm)
90	49.9
75	49.0
60	N/A

Table 15 shows the variation of calculated distance with target angle. At 90° we expect very near 50cm. As the angle is decreased to 75°, the calculated distance moves closer due to the beam encompassing parts of the target that lie closer to the sensor than the 50cm mark. Finally, as the angle hits 60°, the target becomes invisible to the sensor. This poses a problem considering the many walls that the user may encounter. However, this is a worst case scenario because the target was covered in smooth aluminum foil and ultra reflective. A surface with many irregularities will be visible at more extreme angles than our test target.

2.5.4 Target Composition

Target composition is an important aspect to investigate simply because obstacles can be made of many materials. The materials that were tested are wood, aluminum foil, and a cotton T-shirt. These materials cover a range of possible real world objects such as walls, signs, metal poles, and other people.

Target Type	Average Calculated Distance (cm)	Miss Rate (%)
Cotton T-shirt	53.9	65.8
Aluminum Foil	51.9	0.0
Wood	50.7	0.0

(a) 50cm

Target Type	Average Calculated Distance (cm)	Miss Rate (%)
Cotton T-shirt	100.0	0.3
Aluminum Foil	100.2	0.2
Wood	98.7	0.0

(b) 100cm

Table 16: Target composition table

In Table 16, different measurement averages and miss rates are shown for the three types of materials at two distances. Misses occur when the sensor never hears an echo off the target. This is due to the target

being out of range, the target reflecting most of the pulse away from the sensor, or the target absorbing a large portion of the pulse. The most striking thing about the data is the massive miss rate of the T-shirt at 50cm. This can potentially pose a problem if the user is walking in a crowd of people. However, it is suprising because the miss rate falls to nearly 0% at longer ranges.

2.5.5 Walking Speed

Walking speed can affect our measurement in two different ways. First, since the user will be moving at a non-zero speed, the position the signal is transmitted will vary from the position the the reflected signal is received. Next, since the sensor only has a finite beam width, there is a maximum speed that the user can travel before the the reflected signal fails to reach the user.

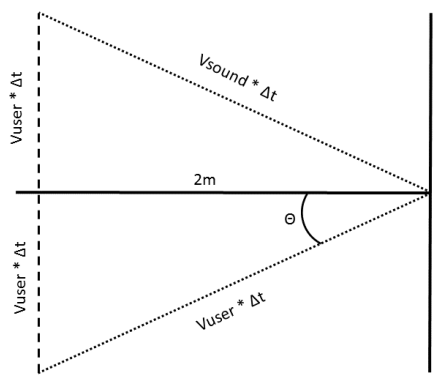

Figure 19: Walking diagram

To explore the first point, we can construct a simple diagram, seen in Figure 19, where the user is 2m (maximum range of device and worst case scenario) from a wall. The user is moving perpendicular to the wall at a rate of V_{user}. The distance between the transmitting location and the receiving location is given by $2 * V_{user} * \Delta t$, where Δt is the time for the signal to travel from the user to the wall. The signal path forms the hypotenuse of a right triangle, with the 2m distance to the wall forming one side and the path walked by the user forming the other side. These two triangles lie back to back sharing the 2m side. The total distance walked by the user is $2 * V_{user} * \Delta t$, and the total distance traveled by the signal is $2 * V_{sound} * \Delta t$. The distance that will be calculated by the device is $V_{sound} * \Delta t$, and the true distance is 2m, meaning an error

of $V_{sound} * \Delta t - 2$m is incurred. In order to quantify this, we must first solve for Δt.

Using the Pythagorean theorem we get,

$$(V_{user})^2 + (2)^2 = (V_{sound})^2 \tag{2}$$

and solving for Δt yields,

$$\Delta t = \frac{2}{\sqrt{(V_{sound})^2 + (V_{user})^2}} \tag{3}$$

Assuming a worst case temperature of 50ºC, a user traveling 1m/s should expect 8.65μm and a user traveling 2m/s should expect 34.6μm of error. Speed of sound was calculated using Equation 1.Clearly this is not a significant source of error and should be ignored.

The second walking speed error source can be observed when a user is walking fast enough that the 15º beam angle is not great enough to direct a signal forward enough to re-encounter the user after reflecting off of an object. A similar diagram can be constructed as earlier, except by forcing the angle θ to be 7.5º, which is half of a beam width. This angle corresponds to the fastest speed someone could go while theoretically still being able to obtain a return signal from the transmitter. Using the definition of sine,

$$\sin(7.5^{\circ}) = \frac{V_{user} * \Delta t}{V_{sound} * \Delta t}$$

Again, using the worst case V_{sound} at 50ºC, we obtain $V_{user} = 47.1$m/s. This is clearly much faster than anyone can travel unassisted, therefore is also negligible.

3 Cost and Schedule

3.1 Labor

Name	Project Role	Hours Worked	Hourly Rate	Total Cost * 2.5 Correction Factor
Adam Auten	Electrical Engineer	240	$30	$18,000
Ann Wu	Electrical Engineer	240	$30	$18,000
Bob Kummerer	Electrical Engineer	240	$30	$18,000
		Total Labor Cost		$54,000

3.2 Parts

Description	Price	Quantity	Part Number	Manufacturer
Ultrasonic Range Finder	$3.95	8	SEN-13959	SparkFun
Demux	$0.38	1	74hc238a	On Semiconductor
Mux	$0.37	1	74hc151a	On Semiconductor
Magnetometer	$2.12	1	MAG3110	STMicroelectronics
Temperature sensor	$0.86	1	DS1624S	Analog Devices
Rocker switch	$0.73	3	GRS-4011-1600	CW Industries
Rotary potentiometer (dial)	$1.29	1	P0915N-FC15BR100K	TT Electronics/BI
PWM Driver	$2.31	1	PCA9635PW,118	
ERM Driver	$1.92	8	DRV2603RUNR	Texas Instruments
Dual 2-input NOR	$0.44	2	NL27WZ02USG	On Semiconductor
5 pack 3V ERM motor	$4.80	2	a14061100ux0057	Amazon
2x8 0.1in pin header	$0.79	1	M20-9970846	Harwin
3.3V Regulator	$0.92	1	LM3671	Texas Instruments
5.5V Regulator	$2.83	1	TPS61032	Texas Instruments
Differential Comparators	$0.58	3	TL331	Texas Instruments
3.3V Regulator	$0.92	1	LM3671	Texas Instruments
Thermistor	$0.76	1		Vishay
Linear Charger	$0.88	1	MCP73833	Microchip
DC Power Jack	$0.73	1	DCJ0202	Conec
Thermistor	$0.76	1	a14061100ux0057	Vishay
Adafruit 4.4Ah Li-ion	$19.95	1	ICR18650	Adafruit
ATSAMD21G18A-AUT	$3.22	2	ATSAMD21G18A-AUT	Microchip
ATSAMD21G Dev Kit	$29.95	1	DEV-13672	Sparkfun
Total	$103.35			

Table 17: Part List

3.3 Schedule

Week	Team	Adam	Ann	Bob
1/30	Finalize proposal	Draft block diagram	Get feedback from visually impaired on design effectiveness	Begin proposal document
2/6	Finish proposal document	Finish block diagram	Finish physical diagram	Identify and document ethical requirements
2/13	Schedule Mock Design Review	Select parts for Power and Haptic modules	Identify proper battery charging procedure and identify any required failsafes	Refine functional requirements for each block
2/20	Finish design document	Finish Circuit schematics for all modules	Complete requirements and verifications table	Characterize ultrasonic rangefinding sensors.
2/27	Prepare for design review	Set up software development toolchain and aid in PCB Layout.	Begin PCB layout	Order all electronics.
3/6		Begin development of software	Finish PCB layout	Assist PCB Layout. Order PCB and backpack/sensor harness
3/13		Complete and verify software	Assemble Sensor Module and construct sensor harness	Prototype Haptic Module
3/20		Spring Break	Spring Break	Spring Break
3/27		Assemble and verify control module	Assemble and verify power module	Assemble and verify sensor module
4/3		Perform full system verification, including durability, ease of use, and effectiveness.	Assemble all modules together, including sensor harness.	Revise PCBs and Order, if necessary. Choose and order new parts, if necessary.
4/10	Prepare for mock demonstration	Revise software as need to improve usability or fix bugs. Help with any hardware modifications.	Continue working on final paper. Generate slides for final presentation	Assemble revised PCB's Port ethics, and Requirements and Verification table to final paper.
4/17	Prepare for final demonstration	Make any last minute software changes.	Rehearse for final presentation	Assemble sections of final paper.
4/24	Final Demonstration	Finalize design documentation section of final paper	Make sure all requirements are met for final paper.	Update all design documents to reflect all changes made
5/1	Final presentation and paper submission	Proof final paper technical content	Proof final paper, ensuring all requirements are met	Proof final paper, ensuring all formatting is correct

Table 18: Weekly Schedule

4 Ethics and Safety

Our project will provide a tool to be used as a means to assist independent living and safety of the visually impaired. While this is an ethically sound idea, there are some implications that come with it. If this tool is used as an aid, we have to take into account for the potential of the tool to mislead the user into a dangerous situation. The IEEE Code of Ethics Code 3 claims that we must be honest and give realistic claims about the capabilities of our device [13].

In order to prevent accidents and to be in accordance with the IEEE Code of Ethics, we must make it clear that this product, at this stage, is by no means a replacement for a white cane. It is to be used only as a supplement to existing tools. We must not overstate the capabilities of it to ensure no more trust is invested in it that it deserves. We discovered that at certain ranges, materials such as cotton T-shirts can actually become invisible to the sensor which can be a potential pitfall of our design. It is important that the user fully understands these problems and uses the device with them in mind.

Additionally, there are components of our design that can be physically dangerous to the user, namely the battery pack. According to IEEE Code 1, we must accept responsibility for the safety of the users of this device, and we must make clear any factors that may be dangerous[13].

In order to properly protect the user from potential malfunctions of the battery pack, we will ensure that it has Ingress Protection (IP) 63 [14]. This will prevent spraying water from entering into the battery pack and compromising the battery. In addition to this, we will incorporate our own system for cutting off the battery in the event of a voltage irregularity or extreme temperature condition. According to the General Battery Safety guideline [15] from the ECE 445 course page, only battery voltages in the 3.0-4.4V range must be allowed. In this event our device will cut off the battery, after warning the user about the imminent power shutdown through the haptic feedback.

In addition to the risks faced by the user, we as the designers and builders also must be extremely cautious. The battery is far and away the most dangerous part of our design. During usage in the lab, we will make sure that we closely follow all instructions given on the General Battery Safety guideline . This includes taking extra fire safety classes, placing our battery inside of the Lithium battery bag during usage, ensuring there is a TA in the room, and being keenly aware of the limitations of the battery and warning signs of imminent failure.

References

[1] [Online]. Available: http://www.rehab.research.va.gov/jour/74/11/2/73.pdf

1.1

[2] "Canes for the blind, maxiaids." [Online]. Available: https://www.maxiaids.com/canes

1.1

[3] A. Nichols, "Why use the long white cane?" 1995, national Federation of the Blind. [Online]. Available: https://web.archive.org/web/20100330050804/http://www.blind.net/g42w0001.htm

1.1, 1.2

[4] "Visual impairment and blindness fact sheet," World Health Organization, Aug. 2014.

1.2

[5] [Online]. Available: http://mira.ca/en/-programs/7/service-dog_26.html

1.2

[6] [Online]. Available: http://visionloss.org.au/mobility-aids/

1.2

[7] "From science to technology: Orientation and mobility in blind children and adults," *Science Direct*, vol. 71, Dec. 2016.

1.2

[8] [Online]. Available: http://www.fut-electronics.com/wp-content/uploads/2012/12/me007_diagram.gif

4

[9] "Pca9635 datasheet." [Online]. Available: http://www.nxp.com/documents/data_sheet/PCA9635.pdf

8

[10] "Drv2603 datasheet." [Online]. Available: http://www.ti.com/lit/ds/symlink/drv2603.pdf

9

[11] [Online]. Available: http://www.ibt-power.com/Battery_packs/Li_Ion/Lithium_ion_tech.html

15

[12] [Online]. Available: https://www.nde-ed.org/EducationResources/HighSchool/Sound/tempandspeed.htm

2.5.2

[13] "Ieee code of ethics." [Online]. Available: https://www.ieee.org/about/corporate/governance/p7-8.html

4

[14] "Ip rating chart." [Online]. Available: http://www.dsmt.com/resources/ip-rating-chart/

4

[15] "Safe practice for lead acid and lithium batteries." [Online]. Available: https://courses.engr.illinois.edu/ece445/documents/GeneralBatterySafety.pdf

4