# Health-Care Neckband

Spring 2017

TA: John A. Capozzo
Jue Gong
Jiahao Wen

# Contents

# 1. Introduction

## 1.1 Objective

Cervical spondylosis, also known as neck arthritis, is a common, age-related condition that affects the joints and discs in your neck [1]. Even though cervical spondylosis is more likely to be present in the elderly, more and more young people are now being diagnosed with cervical spondylosis because of sedentary lifestyle, incorrect posture and overuse of neck muscles. One of the noticeable point is that for most people, cervical spondylosis causes no significant symptoms in the early stages, so you could already be in danger of the condition but still not aware of it. When people realize that they have regular neck pain or stiffness, the condition is usually getting severe and requires physical treatment.

Our goal is to create a wearable neckband that tracks users' daily neck movements. It could remind users via vibration or sound to relax and do neck exercises after sitting down for hours. The neckband also keeps track of users' postures, and reminds them once they are in unhealthy postures. All the data will be collected and stored in the mobile app, users can check easily how they are doing every day, and receive advice from the app based on the data collected. The neckband will be light, user-friendly, and comfortable to wear.

## 1.2 Background

When we conducted research on the influence of cervical spondylosis to young people, we are surprised to find so limited useful information online but only people saying how they had been diagnosed with cervical spondylosis at young ages, and concerning how that might influence their normal lives. That's when we felt the need and urgency to build a health-care neckband for people to prevent or improve their neck health issues by changing their bad habits and starting new and healthier lives.

We are planning to put a dynamic gyroscope sensor system at the back of the neckband, so when users put the neckband on, the gyroscope will be comfortably attached to the back of their necks. The gyroscope measures the angle differences of each of the three axis to the calibrated value, and transfers data both to the microcontroller and the mobile app. The microcontroller computes the data, and contacts the feedback unit, while the mobile app keeps track of the collected data, and make them nicely organized to users.

The core value for our product is user's' health condition. As we noticed that neck health problems have long been overlooked by young people due to the lack of symptoms. Also, there's only few products in such area in the market, and nothing is like our neckband. We feel the responsibility and need to strengthen people's awareness toward their neck health conditions, and to build a product that are truly conducive to their health.

### 1.3 High-level Requirements

- To produce a wearable prototype that can successfully measure user's' posture and record neck movement.
- The neckband should provide feedback to user via vibration once the user is in bad posture for a period of time (depending on the posture of the user).
- The cost of building such a neckband should be affordable, ideally around $100.

# 2. Design

## 2.1 Block Diagram

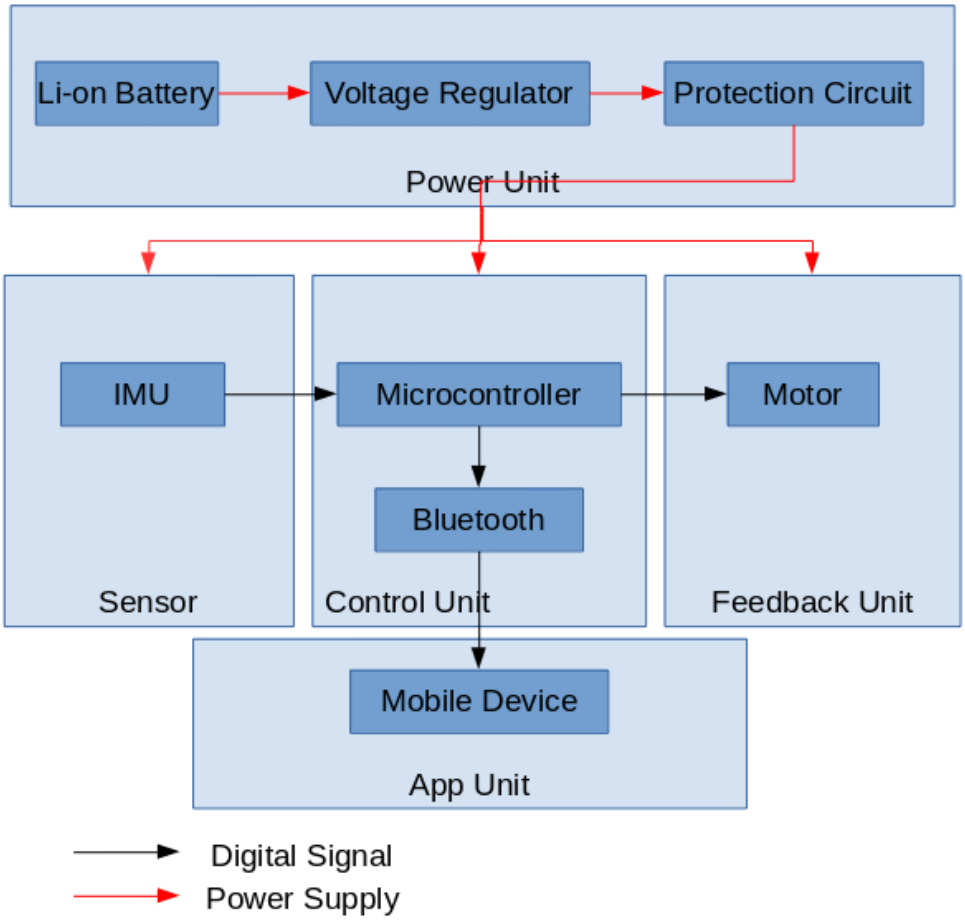


Figure 1. Block Diagram

## 2.2 Block Description

Our design mainly includes five parts: Power Unit, Sensor, Control Unit, Feedback Unit and App Unit. We'll discuss the purpose of each block in the following section.

### 2.2.1 IMU Sensor

We are choosing the MPU-9250 IMU chip as our sensor which contains a 3-axis gyroscope, a 3-axis accelerometer, and a 3-axis magnetometer. This sensor is essential to our design since it helps to measure user neck's current angle versus the zero-offset angle. We chose this chip because it is small and light enough for a wearable device. Also, the operating current and supply voltage of this chip fit our design.

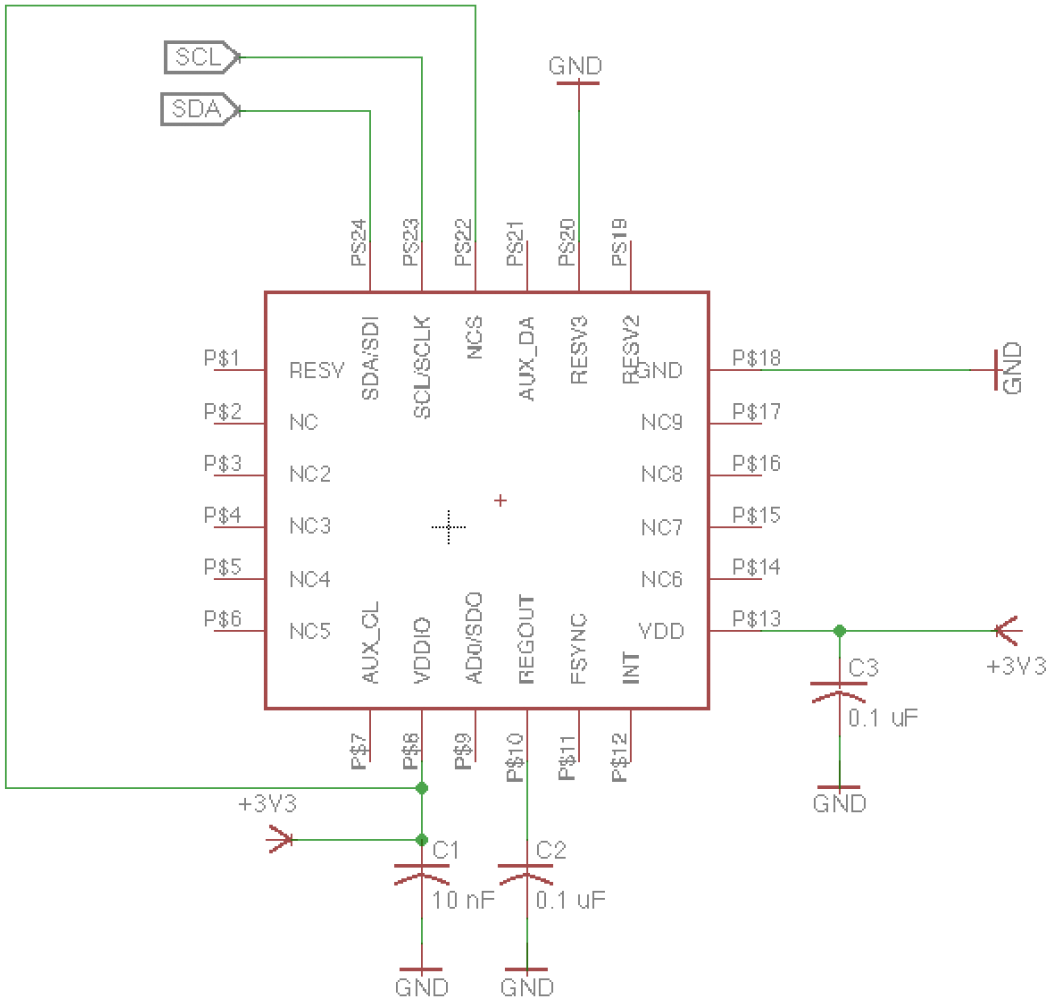


Figure 2.2.1 Schematic of Sensor [4]

### 2.2.2 Control Unit

**Microcontroller**

We choose an ATmega328P microcontroller for our design. The microcontroller will receive digital signal from the IMU sensor. It will then process the data and start the timer when user is in a bad posture for a period of time. The length of the time depends on the posture of the user, so the more degrees the user bends over, the shorter time will there be before the feedback unit reacts. Upon the request of communication from the App, the data will then be sent to the Bluetooth module for transmission. When the timer counts down to zero, microcontroller will send a digital signal to motor.

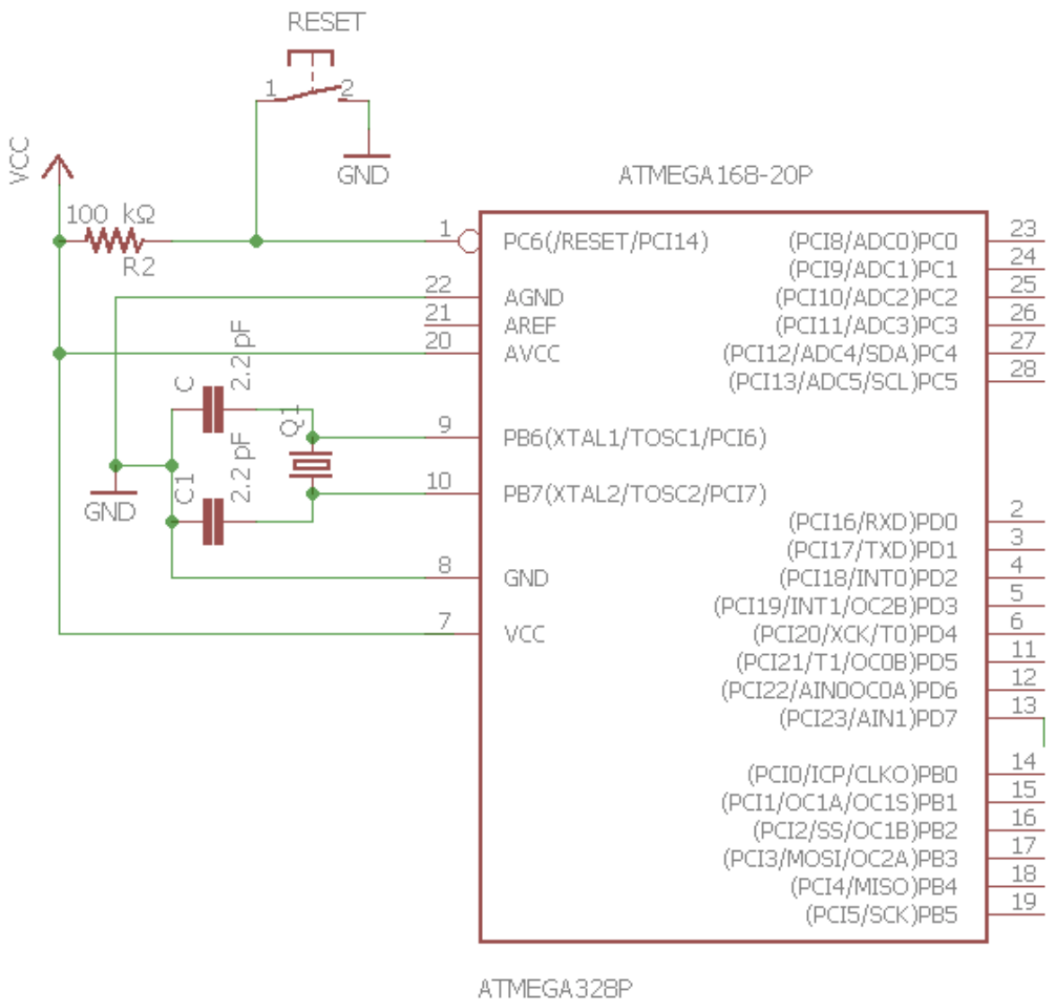


Figure 2.2.2.1 Schematic of Microcontroller [5]

The following two plots illustrate the relationship between the user's posture and the length of the time before our device sends feedback to the user. The idea behind

our design is that the more degree the user bends over, the shorter time there will be before the device sends feedback to our user. We are choosing an exponential function to relate the bending angle to the length of time before sending feedback. In our design, the sensor will communicate with microcontroller at a frequency of 60Hz. Upon receiving each data, the microcontroller will accumulate points for each angle received. Figure 2.2.2.3 illustrates the relationship between points and angles.

The formula is

$$\text{Score} = \text{Angle}^{1.1}$$

Whenever the accumulated points reach 360000, the microcontroller will send a digital signal to motor to turn it on. Thus, the formula to calculate the length before feedback time is then

$$\text{Time(s)} = 36000 / (\text{Score per Unit time} * \text{Frequency})$$

For example, if the user is constantly at a 30 degree posture, the microcontroller will accumulate 42 points per data sample, and thus 42*60 = 2520 points per second. In total the length of time before our device sends signal to the motor will then be 36000/2520 = 14.28 minutes. Figure 2.2.2.2 illustrates the relationship between the bending angle and the length of time before sending feedback.

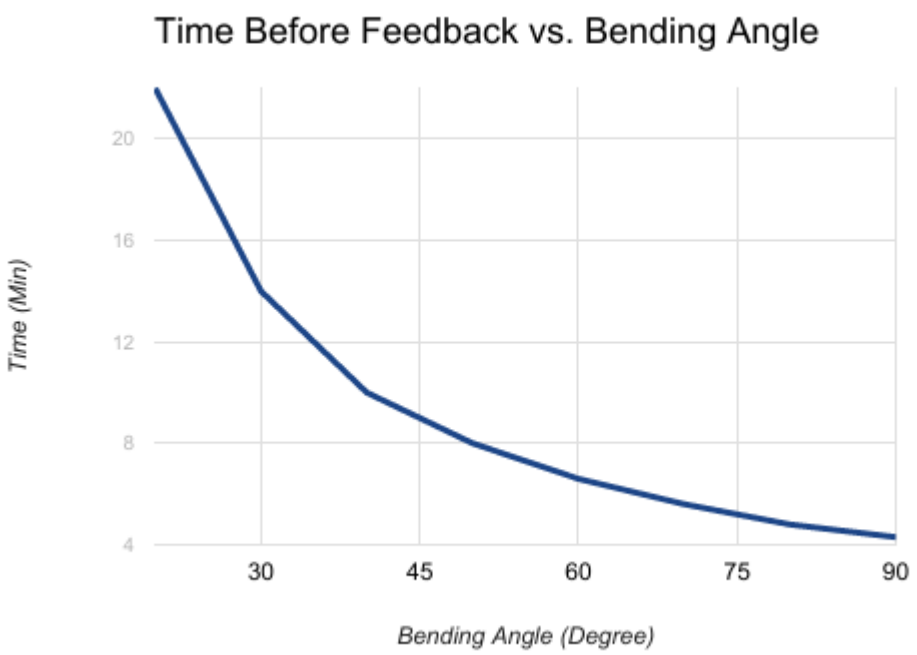


Figure 2.2.2.2 Plot for Time before Feedback vs. Bending Angle

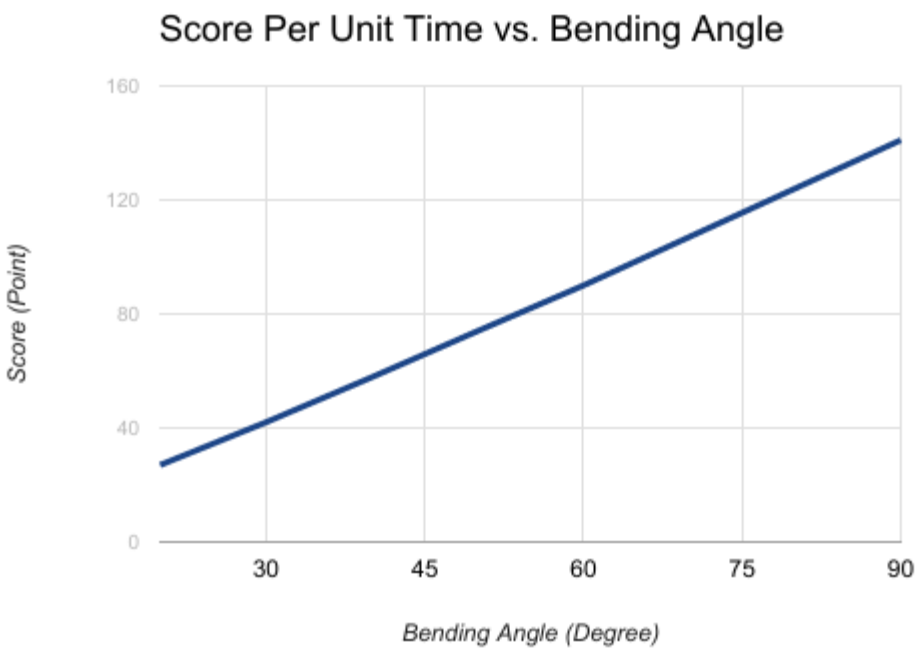


Figure 2.2.2.3 Plot for Score per Unit Time vs. Bending Angle

The following flow chart illustrates the logistic of the microcontroller.

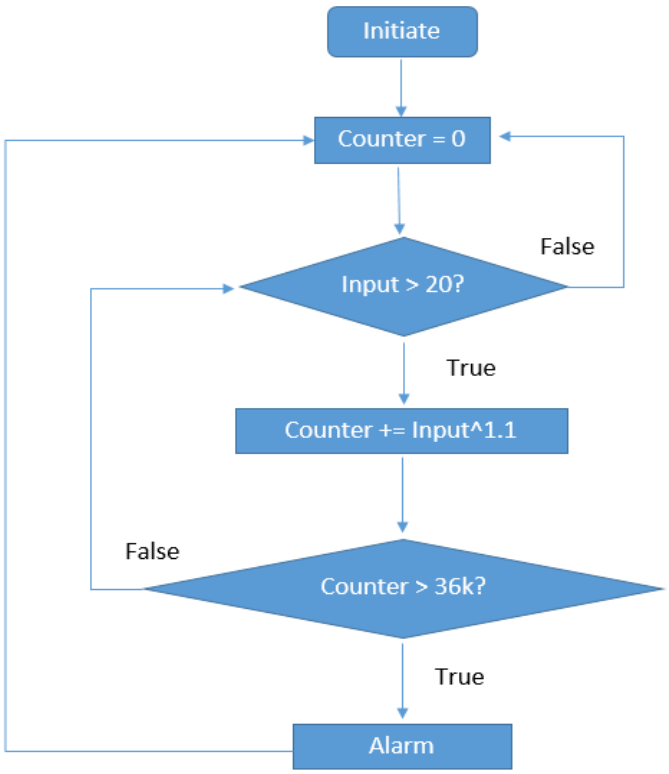


Figure 2.2.2.4 Flowchart of Microcontroller

**Bluetooth**

The Bluetooth module will receive digital signals from the microprocessor and then send data to the smartphone. The Bluetooth should be able to transmit signals at a rate of 1Mbps. In our design, because the user's neck movement will not be stored in the microcontroller, the microcontroller will constantly send the data fetched from the IMU to mobile App.

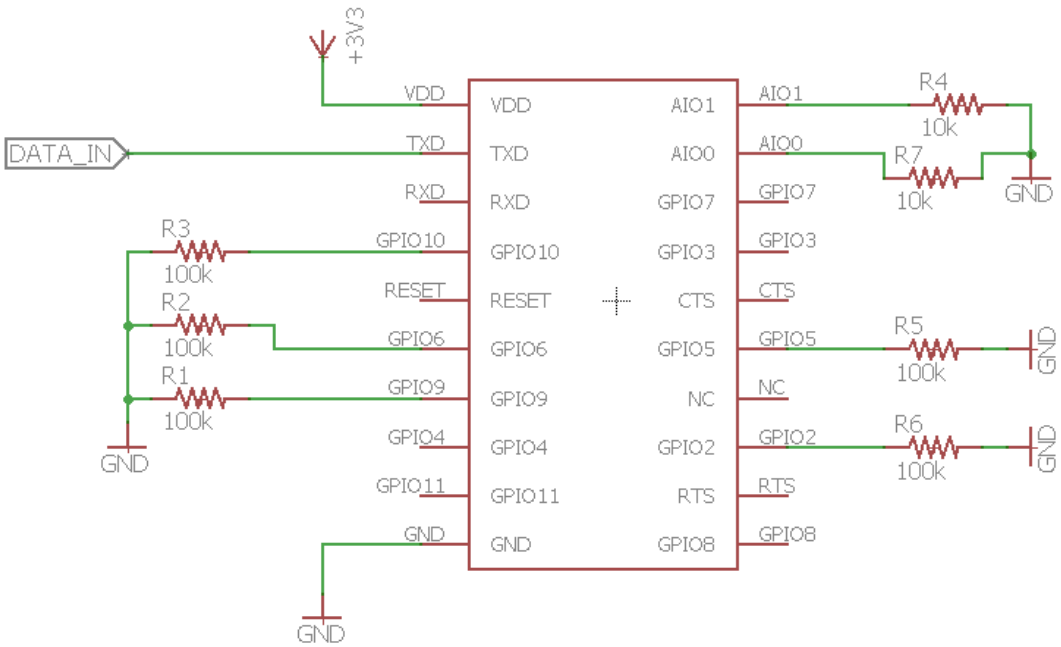


Figure 2.2.2.5 Schematic of Bluetooth Module

## 2.2.3 Feedback Unit

**Motor**

When the user is in an unhealthy posture for a period of time, the motor will vibrate to warn the user.

## 2.2.4 Power Unit

The Power Unit provides power to other hardware components.

**Li-on Battery**

- We will be using 3.7V 400mAH rechargeable lithium battery.
- Protect circuit is needed to ensure safety of the circuit.

**Protection Circuit**

We'll build a battery protection circuit to protect the battery from over-discharging and over-charging. If the voltage falls outside the normal range which is set up to be 2.7V to 4.4V, the circuit will be cut off. If the voltage falls back to the normal range, the circuit will resume to function.

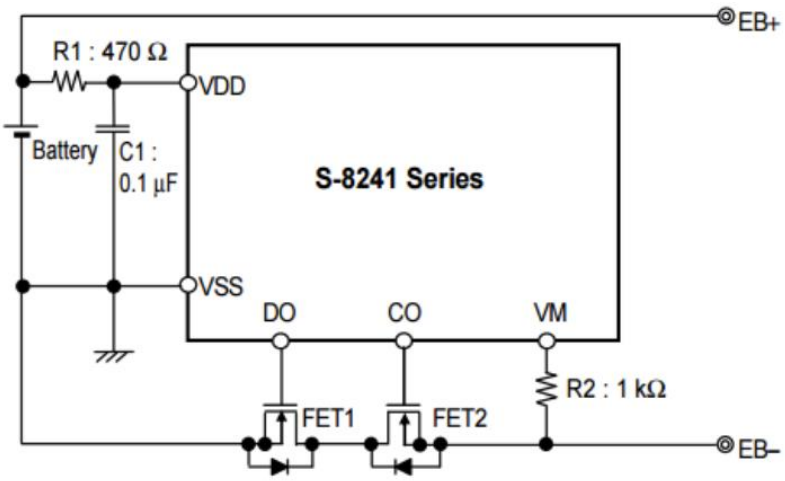


Figure 2.2.4.1 Schematic of protection circuit [6]

**Voltage Regulator**

- Input will be 2 Li-on Battery that is 7.4V.
- The Ideal output should be 3.3V for the use of all other components.

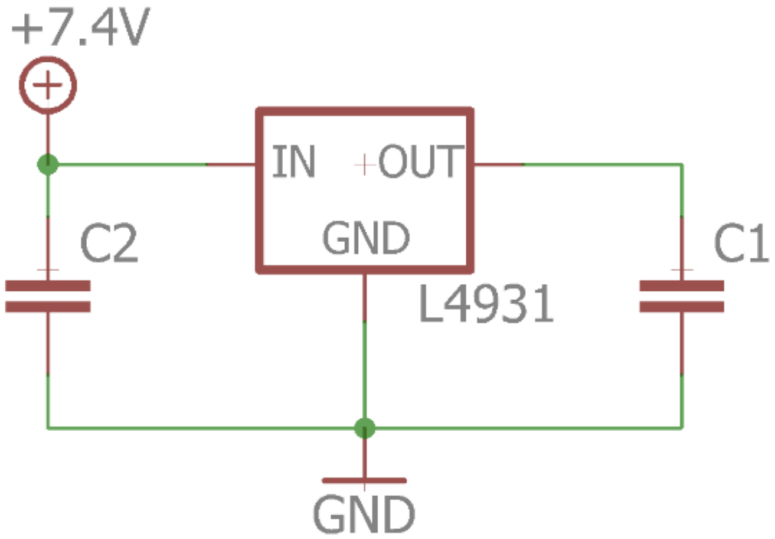


Figure 2.2.4.2 Schematic of voltage regulator [7]

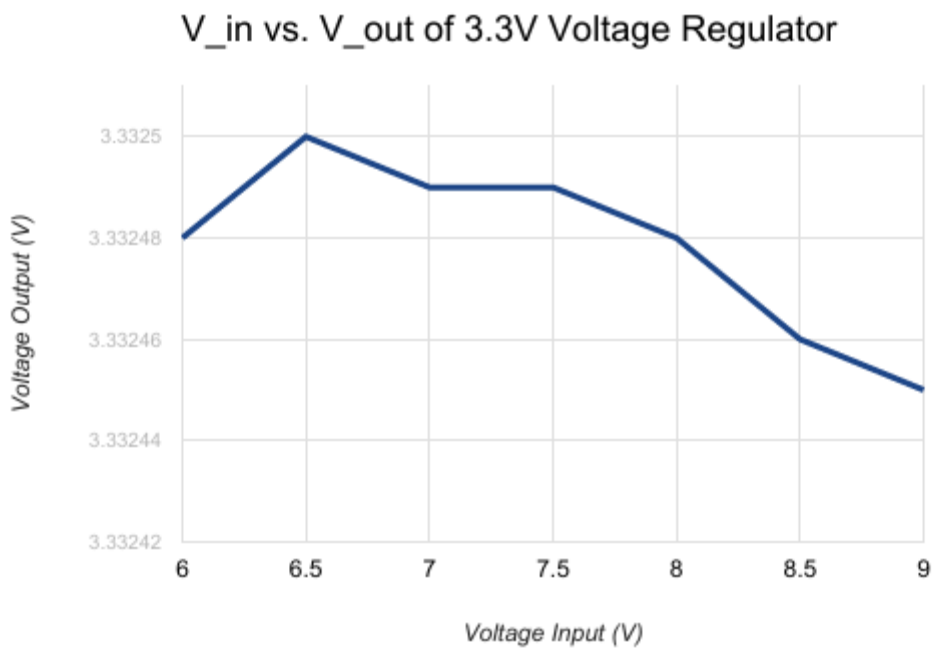


Figure 2.2.4.3 V_out of 3.3V Voltage Regulator vs. V_in

### 2.2.5 App Unit

**Mobile Device**

- Receive data from the Microcontroller via Bluetooth;
- Analyze the data and display results (e.g. current posture, personal posture habit) on the app.

## 2.3 Requirement and Verification

| Module | Requirement | Verification |
|---|---|---|
| IMU | (1) Output range of the angle should be +/- 90 degrees in 3 axis;<br>(2) Measure the angle with accuracy of +/- 5 degrees;<br>(3) Work at the voltage range of 2.7-4.0V;<br>(4) Supports I2C data transmission; | (1) Connect to an Arduino chip with testing code. Real angle is measured with a protractor. Place the IMU in positive and negative 0°, 30°, 60°, 90° in three axis and read data from the Arduino chip. Compare the data to see the accuracy. |
| Microcontroller | (1) With input data from the IMU, it can output correct signal to the motor. | (1) (After verifying the IMU)Connect the IMU to the Microcontroller. Place the IMU to an unhealthy |

| | | |
|---|---|---|
| | (2) With input data from the IMU, it can output correct data to the Bluetooth chip.<br>(3) At least 1K RAM.<br>(4) Work at the voltage range of 2.7-4.0V. | angle for over 3 minutes. The Microcontroller should output a “high” signal.<br>(2) (After verifying the IMU)Connect the IMU to the Microcontroller. Read data from the output port (to the Bluetooth). The data should be the angle of the IMU. |
| Motor | (1) The vibration amplitude should be >= 5m/s^2<br>(2) The motor should work at the voltage range of 2.7-4.0V. | (1) Test the motor at different voltage (between its specified input voltages on datasheet), record the vibration amplitude. |
| Power Unit | (1) Provide 3.3+/-0.3 V voltage to all modules of the system.<br>(2) Can supply power to the system for over 18 hours.<br>(3) For protection circuit, if the input voltage is higher than 4.0V or lower than 2.7V, the protection circuit will cut of the circuit.. | (1) Use voltage meter to test the voltage provided by the Power Unit.<br>(2) Calculate the power consumption of or product and do calculation.(See below)<br>(3) Test the protection circuit individually. Given different input in range 2.7V to 4.0V, see if the circuit still works. Given input less than 2.7V and input higher than 4.0V, see if the circuit is cut off. |

## 2.4 Tolerance Analysis

We will be using 2 3.7V Li-on batteries as our source, so the source voltage is

$$3.7 * 2 = 7.4V.$$

As all the other modules in our circuit works under voltage of no more than 3.6V, we consider 3.3V to be the standard voltage for all of our circuit components. We designed the voltage regulator as described before and did simulations with input voltage from 6V to 9V with increment of 0.1V.

We can see in the plot diagram in the block description above that the output voltage almost stays at 3.3V within 0.1V up and down.

## 2.5 Power Consumption

| Battery | Number | Total Power |
|---|---|---|
| 3.7V Li-ion battery | 2 | 400mAh * 2 = 800mAh |

Table 2.4.1 Battery Power

| Parts | Voltage(V) | Current(mA) | Power Consumption(mW) |
|---|---|---|---|
| IMU | 3.3 | 3.2 | 3.3 * 3.2 = 10.56 |
| Microcontroller | 3.3 | 0.3 | 3.3 * 0.3 = 0.99 |
| Bluetooth | 3.3 | 30 | 3.3 * 30 = 99 |
| Motor | 3.3 | 60(in use) | 3.3 * 60 = 198 |
| LED | 3.3 | 20(in use) | 3.3 * 20 = 66 |

Table 2.4.2 Total Power Consumption

Total energy provided by battery is

3.7V * 800 mAh = 2960 mWh.

Since the parts that always remain active are IMU, Microcontroller and Bluetooth. The constant power consumption is

10.56 + 0.99 + 99 = 110.55 mW.

Suppose our motor vibrates 2 times for every hour, and each time for 2 seconds. The approximate average power consumption is then

198 mW * 4 s / 3600 s = 0.22 mW.

Since the LED will only be turned on when battery runs low, the power consumption of the LED should not affect much of the total usage time. We can safely ignore the power consumption by motor and LED.

Under such assumption, our approximate time for usage is then

2960 mWh / 110.55 mW = 26.8 hours.

# 3. Ethics and Safety

One of the greatest safety concern for our project is the battery. Just as every other wearable technology application, the safety of the users is always the priority. And because our device will possibly have direct contact to human skin, one minor mistake in the design could lead to severe harms to users' health. Thus, we are dedicated to build a device that ensures the least possibility of electrical shock, burns and fire. To achieve the safety goal and obey the IEEE Code of Ethics #1, the power supply we use must adhere to the US safety standard UL60950-1[2].

Another concern is the accuracy of the data and computed result. Because our product aims to monitor the user's neck movement and sitting posture, inaccurate data will not only be ineffective for improving users' health condition but also misleading and potentially harmful. In order to address this issue, we will test and calibrate our product carefully and strive to

minimize error within 5 degrees. If we are unable to achieve the expected accuracy, we will re-design our sensor system by adding more sensors or place them in different positions.

We understand that privacy is a crucial part to users, and to ensure we are following ACM code of Ethics and Professional Conduct 1.7, we'll take appropriate means to protect the data collected from illegal access or accidental disclosure to inappropriate individuals [3]. All the data collected from users will not be used for other purpose without users' consent.

Moreover, in order to follow IEEE Code of Ethics #5, we need to inform users of what groups of people our product is suited to and the potential consequence of using our product [2]. We'll provide proper documentations and warning labels to users to help them better understand and use our product.

# 4. Cost and Schedule

## 4.1 Cost

### 4.1.1 Labor Cost

Total = 2.5 * Hourly Rate * Hours in Total

| Name | Hourly Rate | Hours In Total | Total |
|---|---|---|---|
| Jiahao Wen | $30 | 200 | $15,000 |
| Jue Gong | $30 | 200 | $15,000 |
| Total | | | $30,000 |

Table 4.1 Labor Cost

### 4.1.2 Parts

| **Vendor** | Part Number | Part Description | Unit Cost | Quantity | Total Cost |
|---|---|---|---|---|---|
| Sparkfun | COM-09061 | Microcontroller | $4.3 | 1 | $4.3 |
| Sparkfun | PRT-10401 | Lipo Charger | $7.95 | 1 | $7.95 |
| Sparkfun | PRT-13853 | Lithium Ion Battery | $4.95 | 2 | $9.9 |
| Sparkfun | SEN-13762 | IMU | $14.95 | 1 | $14.95 |
| Sparkfun | WRL-11600 | Bluetooth Module | $29.95 | 1 | $29.95 |

| | | | | | |
|---|---|---|---|---|---|
| Sparkfun | COM-00526 | Voltage Regulator | $1.95 | 1 | $1.95 |
| Sparkfun | COM-14087 | Flip-pin | $1.95 | 2 | $3.9 |
| Total | | | | | $72.9 |

Table 4.2 Parts Cost

### 4.1.3 Total Cost

| Section | Total |
|---|---|
| Labor | $30,000 |
| Parts | $72.9 |
| Total | $30,072.9 |

Table 4.3 Total Cost

## 4.2 Schedule

| Week | Task | Responsibility |
|---|---|---|
| 2/20 | 1.MDR<br>2.Buy all modules needed | 1.Team<br>2.Jue |
| 2/27 | 1.Design review<br>2.Test all modules | 1.Team<br>2.Jiahao |
| 3/6 | 1.Design overall circuit schematic<br>2.Design PCB | 1.Jue<br>2.Jiahao |
| 3/13 | 1.Design PCB<br>1.Microcontroller programming | 1.Jue<br>2.Jiahao |
| 3/20 | 1.Microcontroller programming<br>2.Test communication between hardwares | 1.Jue<br>2.Jiahao |
| 3/27 | 1.Programming mobile App<br>2.Test bluetooth data transmission<br>3.Soldering PCB and test PCB performance | 1.Jue<br>2.Jiahao<br>3.Jue |
| 4/3 | 1.Programming mobile App<br>2.Test overall design functionality on PCB | 1.Jue<br>2.Jiahao |
| 4/10 | Prepare presentation and demonstration | Team |
| 4/17 | Prepare final paper | Team |

| | | |
|---|---|---|
| 4/24 | Final paper | Team |
| 5/1 | 1.Lab Checkout<br>2.Final paper | 1.Jue<br>2.Team |

# References

[1] A. Delgado & R. Nall. (2015). *Cervical Spondylosis* [online]. Available: http://www.healthline.com/health/cervical-spondylosis#Overview1

[2] Ieee.org. (2017). *IEEE Code of Ethics* [online]. Available: http://www.ieee.org/about/corporate/governance/p7-8.html

[3] acm.org. (2017). *ACM Code of Ethics and Professional Conduct* [online]. Available: https://www.acm.org/about-acm/acm-code-of-ethics-and-professional-conduct

[4] InvenSense Inc. (2014). *MPU-9250 Product Specification Revision 1.0* [online]. Available: https://cdn.sparkfun.com/assets/learn_tutorials/5/5/0/MPU9250REV1.0.pdf

[5] Atmel. (2015). *Atmel 8-bit microcontroller with 4/8/16/32KBYTES* [Online]. Available: http://www.atmel.com/images/Atmel-8271-8-bit-AVR-Microcontroller-ATmega48A-48PA-88A-88PA-168A-168PA-328-328P_datasheet_Complete.pdf

[6] S. Instruments. (2013). *Battery protection IC for 1-cell pack* [online]. Available: http://www.mouser.com/ds/2/360/S8241_E-5644.pdf

[7] Adafruit. (2013). *Very low drop voltage regulators with inhibit* [Online]. Available: https://cdn-shop.adafruit.com/product-files/2236/2236.pdf