Color Control Toaster

Team 51 – Omar Ayala-Bernal (obayala2), Sean Cashin (cashin2), and Ignacio Diez de Rivera (id4)

ECE 445 Design Review – Spring 2017

TA: Jacob Bryan

TABLE OF CONTENTS

1 INTRODUCTION

1.1 STATEMENT OF PURPOSE

The purpose of this project is to develop a toaster that can toast bread to a specific, user input shade of color. This effectively gives the user more control over their toast instead of the typical time-based approach that most all toasters on the market employ.

Most toasters use a timer to control the darkness of toast. This approach requires one to envision through trial and error a desired darkness preference, and estimate the required time needed to toast their bread, necessarily resulting in a relative result not exactly what may have been preferred. In addition, forgetting to change this time setting when switching between lighter varieties like white bread and heavier grains such as bagels results in accidental undercooking or burning of perfectly good bread. Furthermore, once the timer is up, the toaster completely turns off, and if the user is not attentive, this would result in cold toast by the time it is retrieved.

What if instead you could select a toast color right on the toaster and have your bread toasted to perfection and remain warm when you pick it up? Our project will use a color sensor to monitor the bread as it toasts, and switch to a low power setting when the toast reaches the input color to keep the toast warm until retrieved.

1.2 BACKGROUND

Burning starchy foods such as bread creates acrylamide, a chemical known to cause cancer [1]. By creating a toaster that shuts off when the bread turns the correct shade of brown, we seek to decrease the likelihood of people eating unhealthy burned or overly dark toast [2].

To detect the color of the toast accurately and precisely, we will need to view an area uniformly as it cooks. We will light the toast with the built-in LED on the color sensor, as well as use the dim orange light generated by the heating elements for color detection; we are wary of the possibility of bleaching out the color due to Metamerism if the light is too bright [3].

1.3 HIGH-LEVEL REQUIREMENTS

- A sensor will successfully obtain the color spectrum of the toast as well as observe the presence of toast and communicate it to the control module.
- The control module will be responsible for quantifying the analog inputs and transmitting output signals to switch between the different states of the toasting process, while flashing the notification sensors appropriately.
- The power module should supply enough steady power to the PCB board as well as the two different currents to the heating element: 1) toasting mode, 2) warming mode.
- The heating module will cook or heat the toast based on the power mode.

2 DESIGN

2.1 BLOCK DIAGRAM

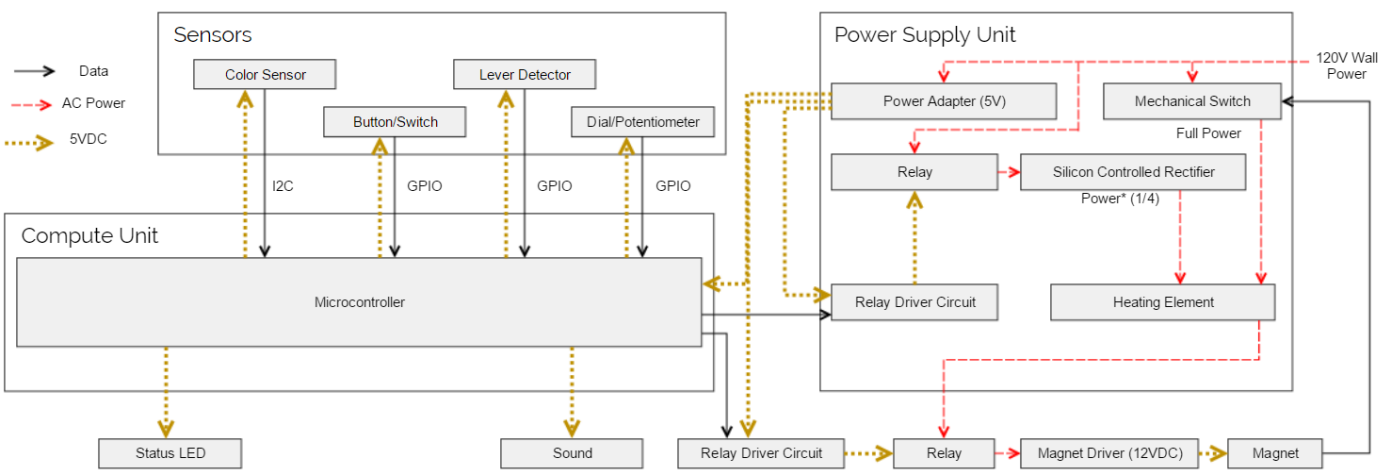

Figure 1. Block Diagram for Color Control Toaster System

2.2 PHYSICAL DESIGN

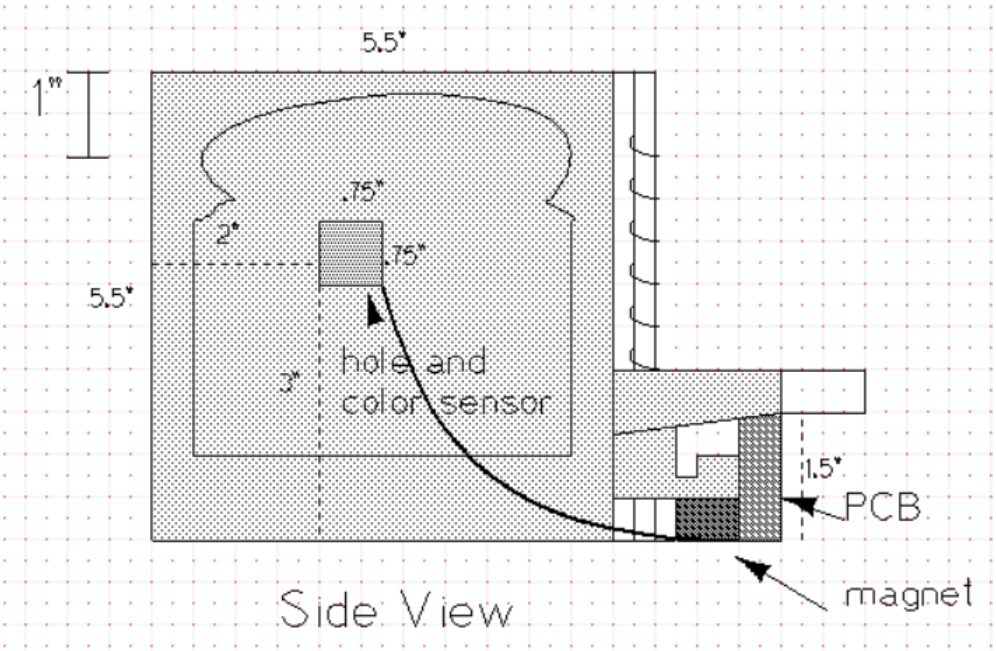

Figure 2. Side View of Sensor Placement on Toaster

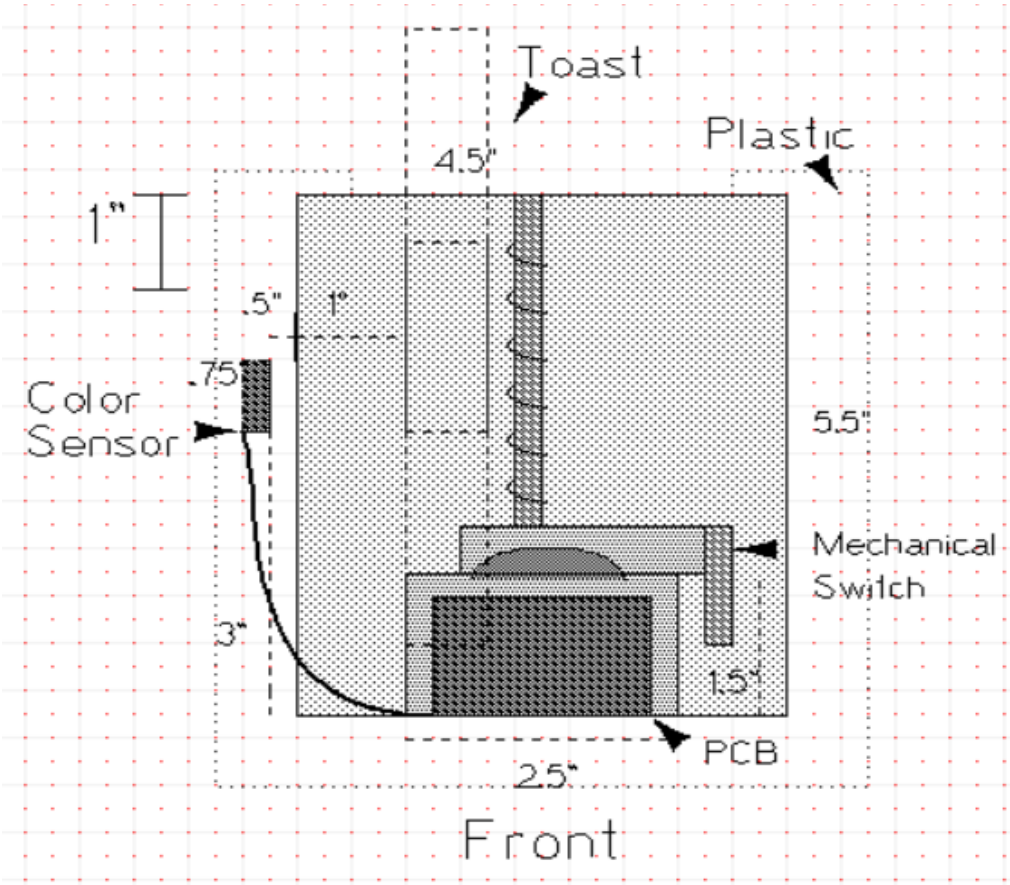

Figure 3. Front View of Sensor Placement on Toaster

2.3 BLOCK DESIGN

2.3.1 Functional Overview

2.3.1.1 *Color Sensor*

This device (RGB Color Sensor) will be responsible for providing the microcontroller with digital returns of red, green, and blue light sensing values. It will also serve as a presence sensor to detect whether bread is inside the toaster or not. The color detection allows us to monitor the change of the color spectrum from its initial color upon insertion [4].

Essentially, the color sensor uses 4 photodiodes which collect analog currents based on the amount of light reflected and use an analog digital converter to obtain a 16-bit digital value. This data is then communicated to the microcontroller thought the I^2C bus [5]. The functional diagram is displayed below in Figure 4:

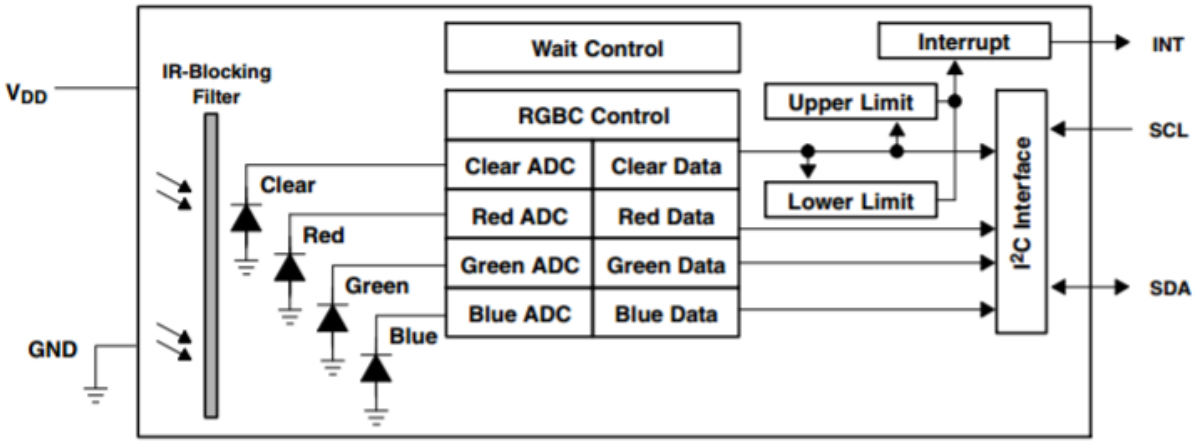

Figure 4. Functional Block Diagram of Color Light-to-Digital Converter

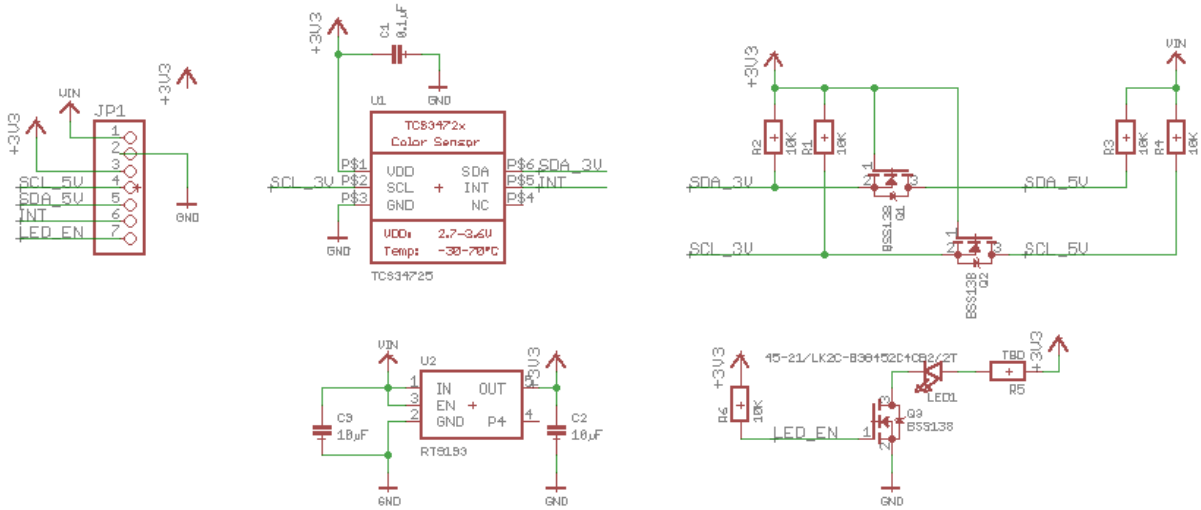

Figure 5. Eagle Schematic of Adafruit's TCS3472 Color Sensor

We did an experiment where we measured the output obtained measuring bread toasted at different levels. These are the results we observed for each of the following pieces of bread:

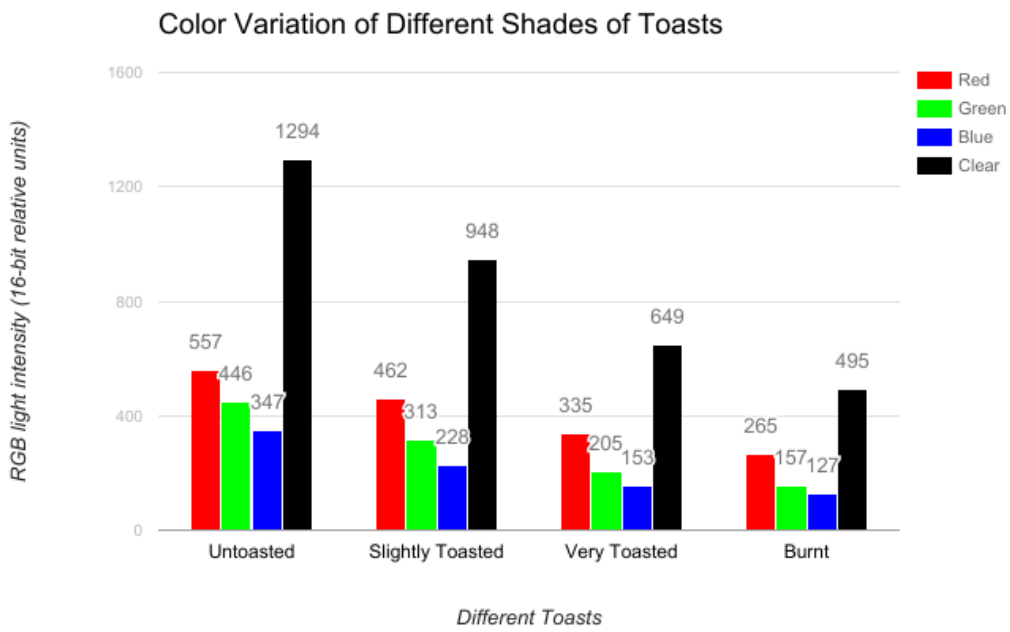

Figure 6. Color Variation of Different Shades of Toast

Figure 7. Four Different Shades of Toast

2.3.1.2 *Push Button*

This device will function as a simple switch mechanism for controlling the initialization of the color detection, while serving as a high priority interrupt that will turn off the power supply and release the bread. The difference between this LED tactile button and a regular push-button is the added bonus of receiving visual feedback upon pressing.

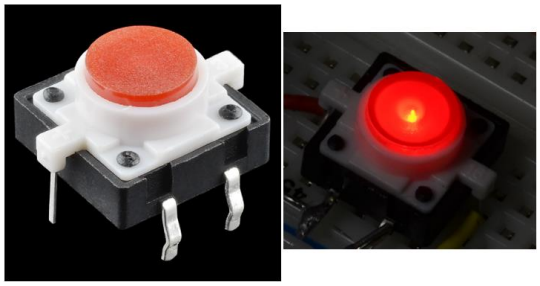

Figure 8. LED Tactile Button - Red

2.3.1.3 *Lever Detector*

This device (crash collision sensor) will provide the microcontroller with a HI signal whenever the lever is pushed down. This input value to the finite state machine will prevent the heating of the coils whenever bread isn't lowered.

2.3.1.4 *Dial*

This device (potentiometer) will process the users desired shade of color for their toast based on predefined color spectrums.

2.3.1.5 *Microcontroller*

This device (ATmega328P) will be tasked with maintaining and using the data received from the color sensor, crash sensor, and push button and relaying voltages to the relay driver circuit, the status LED, and the sound beeper. At the same time, it will control the states of the toasting process through the finite state machine programmed with the Arduino IDE.

This micro-controller will be used to process the data coming in from the color sensors, the photodiode, the color dial, and the push-button and send control signals to drive the relays which will power the heating elements appropriately, as well as the notification devices (LED blinker, and the sound beeper). Given that the ATmega328P possesses a bootloader, it will also have the capability and access to Arduino's packaged libraries, specifically the Finite State Machine (FSM) library that will be used to analyze the various input combinations to operate in the intended state of the toasting process. Essentially this block will serve as the linker between all our inputs and outputs, while at the same time supplying the voltage to power several of the sensors.

Below is a state diagram that the ATmega328P will be responsible for controlling,

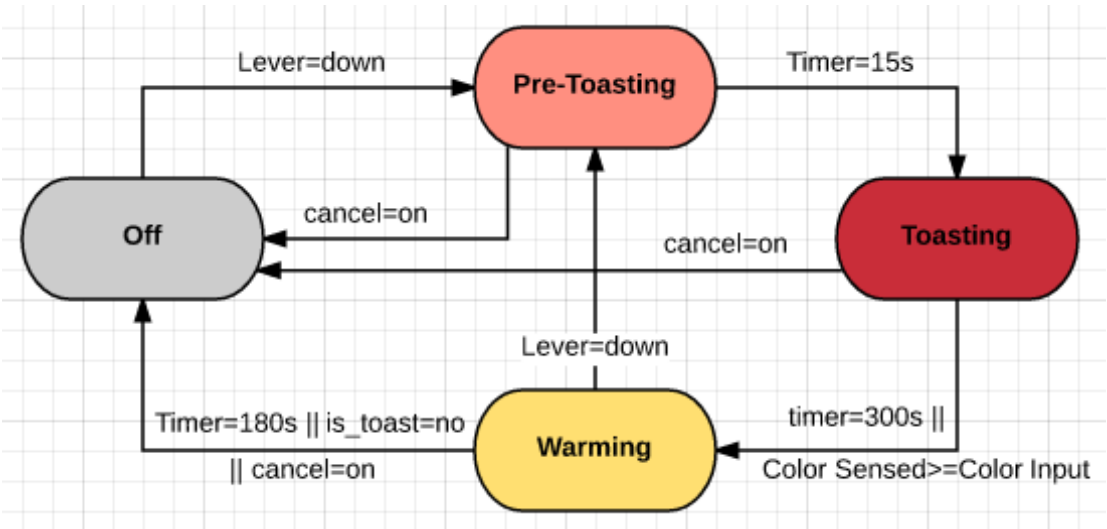

Figure 9. Finite State Machine Diagram

Variables:

<u>Input</u>

Lever: up/down. Sensed by the crash sensor.

cancel: on/off. Simple button.

timer: counts seconds. Measured by the micro-controller with a clock.

is_toast: yes/no. Determines if there's a toast in the toaster. Detected by color sensor.

color_input: integer value. Input by the user with a potentiometer.

color_sensed: integer value. Sensed by the color sensor.

<u>Output</u>

High power: 120V AC.

Magnet: 12V DC.

Low power: rectified 120V AC.

LED: 5V.

Beeper: 5V intermittent signal.

<u>States</u>

Off: All output variables are off

Pre-toasting: Reset timer, high power and magnet on. All other variables off.

Toasting: High power and magnet on. All other variables off.

Warming: Reset timer. Low power, beeper and LED on. Other variables off.

2.3.1.6 *Status LED*

This device (White LED) will blink to notify the user that the toast has reached the desired shade (concurrent with sound beeper).

2.3.1.7 *Sound Beeper*

This device (Piezo Transducer) will produce a nice audible tone to notify the user that the toast has reached the desired shade (concurrent with status LED).

2.3.1.8 *Power Adapter*

This device will provide power at a significant voltage drop from the wall power to the rated voltage of the microcontroller. Its importance is in powering all electronic devices present in this design (i.e. sensors, LED's, microcontroller). This device is very important in preventing the damage of the microcontroller, since it's absolute maximum operating voltage is 6.0V and will ultimately power the device directly from the outlet.

2.3.1.9 *Relay Driver Circuit*

This block will operate the relay so that it can operate as a switch that can open or close by supplying DC voltage using less power rated for the relay and the Zener diode. It will use the functionality of amplification provided by a transistor to supply a larger current from a much smaller input current.

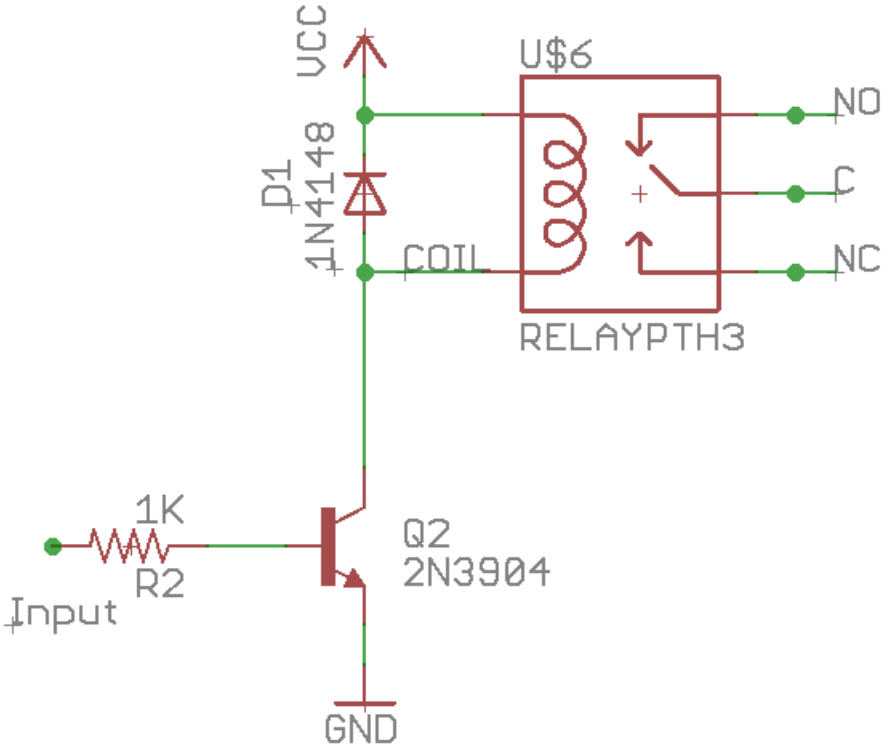

Figure 10. Relay Driver Circuit w/ Relay

Relay Driver Circuit Calculations

To induce the magnetic force, we must send a current through the coil (electromagnet) of the Relay. This magnetic force will be responsible for pulling a steel paddle and creating a contact with a copper paddle (like a switch). This allows us to control 120VAC power from the low-power input from the microcontroller. Since the coil is physically isolated from the paddles the large 120VAC will not run back to the microcontroller and prevent it from frying it. Such capabilities require careful consideration of current and power analysis.

STEP 1: From Datasheet (JQX-15F)

$$Coil\ Magnetic\ Resistance = 27\ \Omega$$

$$Coil\ Voltage = 5V$$

STEP 2: Calculate Current Flow

$$V = IR; Ohms\ Law$$

$$I = V/R$$

$$I = 5V/27\Omega = 0.185\ A = 185mA$$

This current value will be our collector current for the NPN transistor.

STEP 3: Calculating R1

The DC current gain of our transistor is 75 at 10mA at 10V. This value can be calculated by,

$$hfe = I_C/I_B$$

Since we know hfe and Ic, we can find Ib by,

$$I_B = I_C/hfe$$

$$I_B = 0.185/75 = 0.00246667 = 2.467mA$$

Using Ohm's law,

$$R1 = V/I_B$$

$$R1 = 5V/2.467mA = 2026.75\ \Omega$$

So, our chosen R1 will be 2kΩ.

2.3.1.10 *Relay*

This device (JQX-15F/005) will be responsible for switching 120VAC using 5VDC generated from the ATmega328P. This mechanism is driven by current which activates the magnet, which in turn closes one circuit and opens another through a switch. It will also galvanically isolate the electronics from the wall-power.

2.3.1.11 *Magnet Driver*

This device (simple half-wave rectifier) takes in 12VAC and outputs 12VDC. It uses a diode and a capacitor in parallel to rectify the input signal.

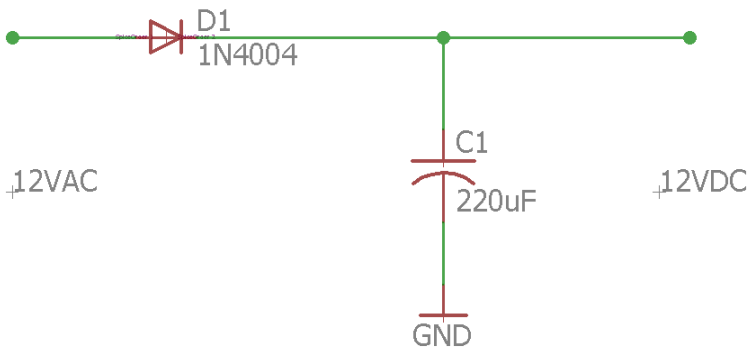

Figure 11. Half-wave Rectifier Circuit

2.3.1.12 *Magnet*

The electromagnet, which is supplied power by the relay circuit, attracts the piece of metal on the handle and holds it in place for as long as the state of the toaster is in heat (full power) mode. Once this power is no longer supplied and the next state is the warm state (low-power) the magnet will not be able to attract the piece of metal and the toast will be released and elevated to its initial insertion height.

2.3.1.13 *Mechanical Switch*

This device closes upon depression of the toaster lever which engages the magnet and opens on disengagement of the magnet. In addition to that, it connects the heating elements to full power (120VAC).

2.3.1.14 *Silicon Controlled Rectifier Circuit*

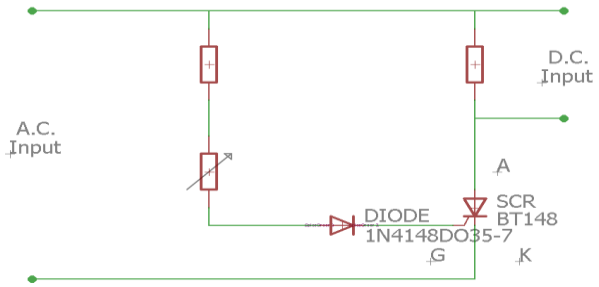

Figure 12. Eagle Schematic of the SCR Circuit

In order to delay the triggering of the SCR to the peak of each positive wave, we can calculate the value of the two resistors in series to sum up to R, which can be calculated by:

$$R = \frac{\left(V_{AC,pk} - V_{SC,R_{ON}}\right)}{I_{GT}}$$

$$= \frac{\left(120\sqrt{2}V - 1.7V\right)}{8mA}$$

$$= 21k\Omega$$

2.3.1.15 *Heating Element*

This device (nichrome wire) which has a high electrical resistance and does not oxidize will connect directly to the power line (for heating) or connect to the output power generated from the SCR (for warming).

2.3.1.16 *Overall System*

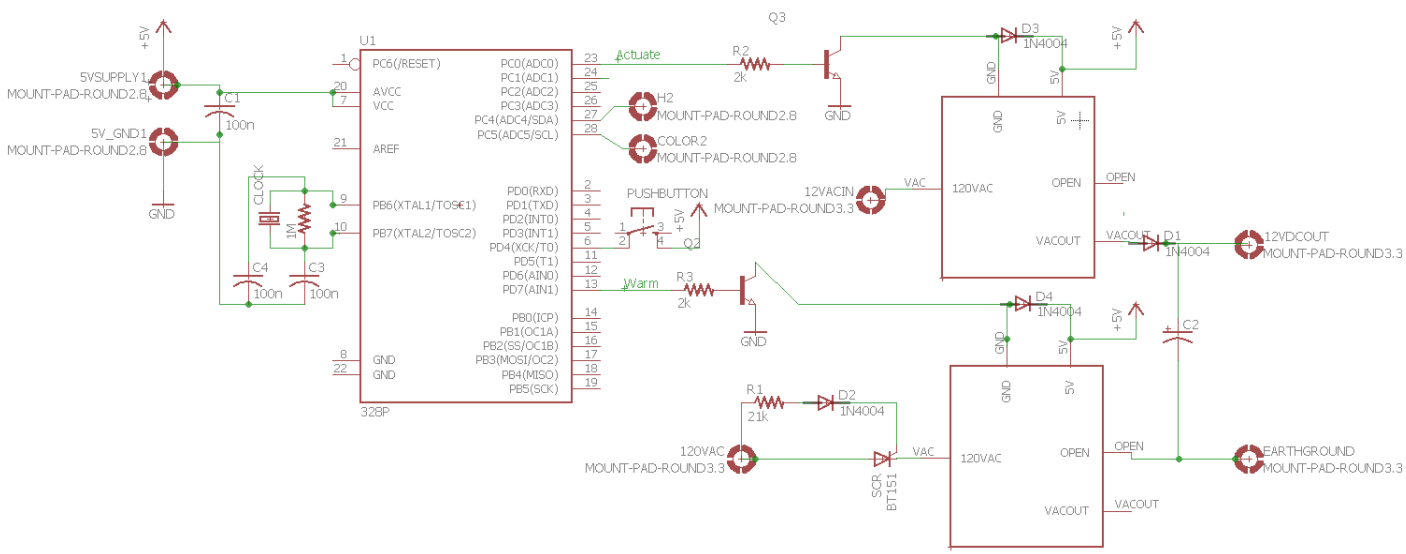

Figure 13. Circuit Schematic of the Overall System

2.3.2 Requirements and Verifications

Requirement	Verification
Color Sensor	
1. The color sensor should be able to resolve at least four distinct toast colors using the 16-bit digital input values of reflected light intensity in the form of red, green, and blue channels in the range of 0 - 65,535.	1. Verification process for item 1 a. Shine varying intensities of light on to the sensor ranging from no light (burned toast) to very bright (bread) with two intermediates. b. The values captured and shown in the console should range linearly between 0 +/- 100 to 65,535 +/- 100.
Push Button	
1. Must be easily-pressable.	1. Verification process for item 1 a. Press button and ensure that no more than 0.25 N +/- 0.1N is needed to collapse completely. b. Measure force by placing a 0.025kg object on push button.
Lever Detector	
1. The crash sensor should be able to consistently detect when the lever has been pulled down 90% +/- 5% of the time.	1. Verification process for item 1 a. Place crash sensor beneath lever rig, and test 100 times. b. Ensure that the sensor passes 85 - 95 times.
Dial/Potentiometer	
1. The dial must be easily-turnable.	1. Verification process for item 1 a. The rotational torque needed to turn the knob should be between 1mN-m to 8mN-m +/- 1mN-m
ATmega328P	
1. Arduino should be supplied with a voltage that ranges from 1.8V to 5.5V. In order to supply the rest of the components, we will require 5.0V +/- 0.5V.	1. Verification Process for item 1 a. Probe pin 7 & 8 (VCC and GND respectively) of the ATmega328P chip with the Keysight Digital Multimeter

2. Output DC current for the analog I/O pins (23 - 28) should be 15.0 mA +/- 5mA at 16Mhz clock. 3. Properly quantize analog inputs to 0-1023. 4. Shift between different states given particular inputs, without reaching a deadlock state.	b. Measure the voltage and ensure it falls between 4.5V - 5.5V. 2. Verification Process for item 2 a. Probe pins (23-28) with respect to the GND pin (8) of the ATmega328P with the Keysight Digital Multimeter. b. Measure the current and ensure it falls between 10mA – 20mA. 3. Verification Process for item 3 a. Power controller with 5V b. Attach all analog pins to a variable voltage source. c. Upload code and set all digital pins to INPUT and print the values to the console d. Slowly sweep input voltage and check for proper quantization. 4. Verification Process for item 4 a. Upload state-machine onto Waveform Generating Software b. Apply all input combination signals and observe output signals. c. Ensure proper switching and timing on timing diagram. d. Ensure no deadlock states.
Status LED	
1. Must be visible from 3 meters away with a drive current of 10mA and supply 200 lumens +/- 50 lumens.	1. Verification Process for item 1. a. Use a light meter 1m away from the toaster, from 4 distinct locations (90 degrees apart) b. Measure 50 Lux +/- 15 Lux
Sound Beeper	
1. Must produce an audible sound of 60 dB +/- 20dB 2. Sound has a frequency of 10kHz +/- 9kHz.	1. Verification Process for item 1 a. Scope the output of the beeper with an oscilloscope and use the measure tool to find the frequency range of the sound. 2. Verification Process for item 2

	a. Activate the sound beeper and use a decibel measuring app to ensure it falls within the required threshold.
Power Adapter	
1. Needs to be able to supply at a voltage of 4.15V +/- 0.85V for a 16Mhz clock at maximum and 0 current (as found on the ATmega328P data sheet). 2. Needs to supply 450mA max to power our electronics. (Relay + Relay + Microcontroller = 185 + 185 + 80).	1. Verification Process for item 1 a. Use a multimeter to measure the voltage across the GND and VCC terminal of the power adapter. b. Ensure the voltage reads between 3.3V to 5V for a current draw of 0 – 450mA.
Relay Driver Circuit	
1. Must supply the Relay with a base current of 2.5mA +/- 1mA. 2. Must generate a collector current of 12.5mA +/- 1mA	1. Verification Process for item 1 a. Place a 100Ω resistor in series with the diode. b. Use the multimeter to measure the voltage across the Collector and GND terminals. c. Ensure the voltage reads 3.05V +/- 0.5V.
Relay	
1. Must conduct and interrupt 0 - 6.8 amps at 120VAC. 2. Actuate the switch at 5V at 185mA.	1. Verification process for item 1 a. Connect 120VAC in series to relay and 18.5 Ohm resistor and measure current. 2. Verification process for item 2 a. Interrupt maximum current using 5V, 185mA+/-20mA signal from BJT.
Magnet Driver	
1. Must convert 12VAC to 12VDC for up to 200mA	1. Verification process for item 1 a. Magnet holds lever down against force of spring.
Mechanical Switch	
1. Conducts and interrupts up to 6.8 Amps at 120VAC	1. Verification process for item 1

	a. Heating elements turn on and off when lever is depressed and actuated.
Silicon Controlled Rectifier Circuit	
1. Can supply 25% +/- 5% of 766W at 120VAC to heating elements for up to 3 minutes	1. Verification process for item 1 a. Supply 120VAC to the SCR circuit with an 18.8 Ohm load for 3 minutes and monitor SCR.
Heating Element	
1. Must dissipate between 766W +/- 10W of power when operated at 120VAC +/- 10VAC for at least 4 minutes. 2. Must dissipate between 207W +/- 10W of power when operated in the warming state.	1. Verification process for item 1. a. Connect an ammeter between the nichrome wire and ground. b. Supply 120VAC signal across the nichrome wire and ground (i.e. plug toaster into wall power) c. Confirm that the current remained 4.15 A +/- 0.5A d. Confirm that the voltage reading remained 120VAC +/- 10VAC. 2. Verification process for item 1. a. Connect an ammeter between the nichrome wire and ground. b. Supply 30VAC signal across the nichrome wire and ground (i.e. plug toaster into wall power) c. Confirm that the current remained 3.125 A +/- 0.5A d. Confirm that the voltage reading remained 40VAC +/- 10VAC.

Table 1. Requirements and Verification

2.4 TOLERANCE ANALYSIS

Since the most important aspect of our project is a precise and consistent measurement of the color sensor, the focus of the tolerance analysis should be on that. The most crucial requirement of our project is an accurate and precise measurement of the brownness of the toast.

The output of the color sensor is a bus of 16-bit digital values of the current going through the RGB photodiodes. We get a value for the red, green, blue and clear (brightness). This value represents a level of light intensity of specific frequencies, according to Figure 12 that relates each wavelength to each output value. We should take into account that the color values we're working with don't have units; they're relative values of luminosity.

The values of RGB and clear color that we operate at go from 0 to around 1200 in our relative units. Note that the sensor could however measure up to 65535, but this only happens when pointing a very bright light close to it. To be able to detect a reasonable real-time difference between different shades of brown, a precision of one relative unit is more than enough with this range. From previous experiments, we were able to observe a change of approximately 799 in the relative value of the clear output from untoasted to burnt. When making this measurement the bread was in the toaster for 4 minutes. We could observe certain linearity in the change of the RGB values. Therefore if we divide the change in clear color value by the number of seconds we get:

$$799240=3.33 \text{ units/s}$$

This is the average change in the clear color value each second, enough to make a big difference in real-time.

Regarding temperature, our sensor will be partially isolated from the power resistors, however it's unavoidable to have it heat up a bit. Our sensor has an optimal working condition from -30 to 70 °C. The inside of the toaster, during toasting period, heats up to 150 °C approximately, therefore we will ensure to isolate thermally the sensor to keep it as under 70 °C as possible by distancing it from the heating elements. The following graph from the datasheet (Figure 11) shows how the sensor can perfectly work under different temperatures. It shows how linearity is maintained between the voltage the sensor is outputting and its output current from which we extract the RGB values. The sensor will only start working 15 seconds after toasting starts, when the temperature is stable, and since it will be thermally isolated, we don't expect temperature to affect our values.

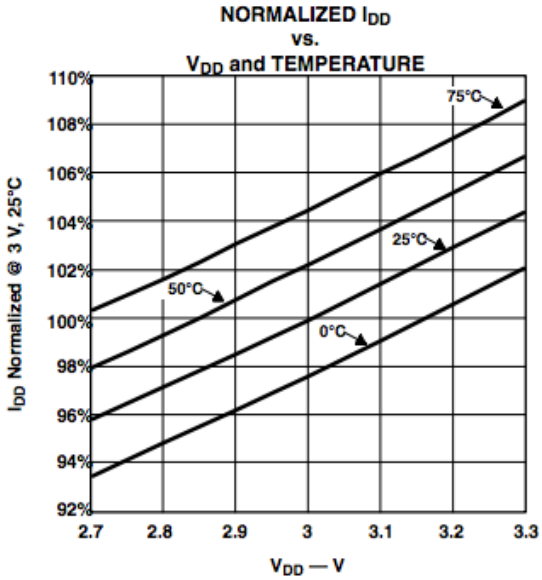

Figure 14. I-V Relation at Different Temperatures

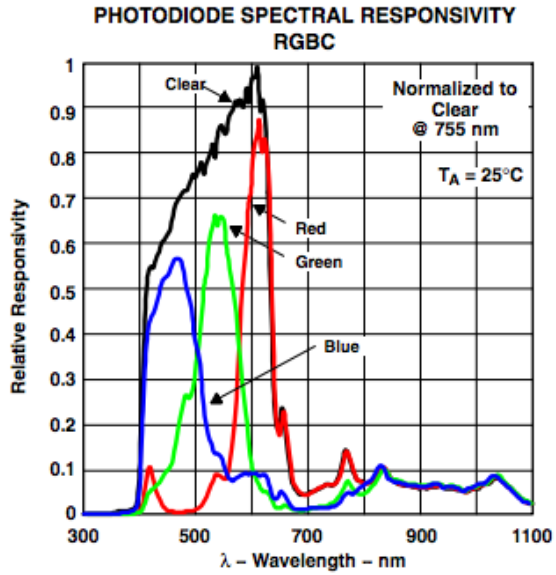

Figure 15. Responsivity of each Color Channel at Varying Wavelengths

3 COST & SCHEDULE

3.1 COST ANALYSIS

3.1.1 Labor

Navigating through the Salary Averages page on the Illinois ECE webpage it can be seen that the average salary of an Electrical Engineer graduate is approximately $67,000/yr. Assuming a 52-week work period, each at the national average of 40 hours/week, the hourly pay rate can be calculated to be:

Hourly Rate = (Yearly Salary) / 52 weeks / 40 hours

Hourly Rate = $32.21

LABOR				
Service		**Hourly Rate**	**Hrs.**	**Total**
Electrical Engineer	Omar Ayala-Bernal	$32.00	225	$18,000.00
Electrical Engineer	Sean Cashin	$32.00	225	$18,000.00
Electrical Engineer	Ignacio Diez de Rivera	$32.00	225	$18,000.00
Labor Sub-Total				$54,000.00

Table 2. Labor Sub-Total Table

3.1.2 Parts

PARTS				
Description	**Manufacturer**	**Part #**	**Qty.**	**Cost**
ATmega328P-PU with Arduino Bootloader	Atmel	DEV-10524	1	$5.95
Aluminum Capacitor	Panasonic Electronic Components	EEU-FC1E221	1	$0.42
Diode Small Signal	Fairchild	1N4148	6	$0.15
RGB Color Sensor	Texas Advanced Optoelectronic Solutions (TAOS)	TCS34725	1	$7.95
Wall Adapter Power Supply	NLPOWER-CN	SFE5V2AD1	1	$5.95
DC Electromagnetic Relay	Shaanxi Qunli Electric Co.	JQX-15F	1	$2.95
Push Button	Omten Electronics	TSL12121/TSD1265	1	$1.95
Potentiometer	Panasonic	EVU-F2AF30B14	1	$0.95
LED	China Young Sun LED Technology Co.	YSL-R531Y3D-D2	1	$0.35
Piezo buzzer	TDK	ef532_ps	1	$1.50
Resistor (1000 Ω) 5-Pack	RadioShack (Supplier)	2711321	1	$1.94
Resistor (1 MΩ) 5-Pack	gadgetory.com (Supplier)	100011	1	$0.95
Resistor (21 kΩ) 5-Pack	RadioShack (Supplier)	2711339	1	$1.94
Capacitor (100 nF)	Addicore	117	1	$0.08
Part Sub-Total				$51.62

Table 3. Part Sub-Total Table

3.1.3 Grand Total

GRAND TOTAL	**$54, 051.62**

Table 4. Grand Total Table

3.2 SCHEDULE

No.	Week	Omar	Sean	Ignacio	Team
1	2/6	Proposal preparation: control unit and writing supervision	Proposal preparation: power, dispensing and control unit.	Proposal preparation: sensor and color control	Form design matrix of potential parts for determining design specks. Begin design
2	2/13	Decide on electronic elements to use	Electric design. Choose a way to lower the power.	Make state machine for the toaster.	Make final touches on design for design review
3	2/20	Tests on color sensor and design review work (Block diagram)	Work on design and circuitry towards design review	Test color sensor and design review work	Finalize design and prepare for design review
4	2/27	Send toaster to machine shop	Order parts for low power heating system	Test the color sensor with the help of MATLAB	Revise design based on documents from design review
5	3/6	Design the PCB for our electronics	Run test on toaster resistor with different inputs	Place the color sensor in the toaster and test it	Get the toaster ready to mount the elements on it
6	3/13	Build PCB board and mount all the elements on it	Build the power electric circuitry (adapter and low power)	Adjust layout for optimal color sensor operation	Have all the necessary elements of our project ready
7	3/20	Spring Break			
8	3/27	Put all the electronics together and connect them into the toaster	Test the effectiveness of the heating elements	Program FSM using Arduino IDE	Work on electronics, wiring and physical layout
9	4/3	Program FSM using Arduino IDE	Ensure the lever mechanism (magnet) work	Program FSM using Arduino IDE	Work on electronics, wiring and physical layout
10	4/10	Test and debug all the control system	Test and debug power elements	Test and debug state machine	Testing and debugging
11	4/17	Work on the safety and durability of the system	Verify & tweak circuits for proper functionality	Ensure Functionality and final tests	Prepare for demo
12	4/24	Ensure stable operation. Work on presentation and usability	Set-up a proper demo procedures and parameters	Debugging the whole machine	Run demos on the final product and verify all goals were met.
13	5/1	Work on final paper and presentation	Work on final paper and presentation	Work on final paper and presentation	Focus on editing and wrapping up final paper and presentation slides

Table 5. Schedule

4 DISCUSSION OF ETHICS & SAFETY

4.1 SAFETY

Given the nature of our project, and the fact that toasters are heat-generating electrical devices, there are numerous safety precautions that should be taken into careful consideration. Looking at the power consumption of common, household appliances, the toaster is in the high-wattage category at 1800W. It should come as no surprise that there are dangers and hazards associated with this device, these include: electric shocks, 1st and 2nd degree burns, and fires.

The toast is composed of many elements that, when plugged, reach a voltage of 120V AC. This involves a significant risk when manipulating it, as we will work with it most of the time without the case that typically covers it. We should therefore consider following the basic rules when tinkering with it. These include: using rubber soul shoes, the one hand rule; wearing protective gloves, keeping liquids away from it, unplugging it when unused, and finally doing all the pertinent connections BEFORE powering the toaster.

Regarding heat, we should keep in mind how hot some parts can get in order to not burn our hands, and most importantly, always keep an eye on it while it’s powered, even if it’s not supposed to be on heating mode; we could always program the system incorrectly and cause it to work unexpectedly when it’s powered, ultimately causing it to catch on fire.

Thinking about the user, by using a plastic chassis thermally isolated from the heating elements, we hope to eliminate the possibility of burning hands or electric shock. As far as starting a fire, we anticipate having a maximum time of toasting of 5 minutes and a maximum time of warming period of 3 minutes no matter what the sensors detect.

4.1.1 Safety Manual

When using an electrical device that operates with high voltages (as our Toaster does) it is necessary to place an emphasis on basic safety precautions, which should be followed. These precautions include:

1. Do not attempt to dislodge food when toaster is plugged in.
2. Do not immerse cord, plug, or toaster in water or other liquid so as to avoid electrical shock.
3. Do not operate toaster with a damaged cord or plug or after toaster malfunctions or has been damaged in some way.
4. Metal foil packages or utensils must not be inserted in a toaster as they may involve a risk of fire or electric shock.
5. A fire may occur if toaster is covered or touching flammable material, including curtains, draperies, walls, overhead cabinets, paper or plastic products.

It is important to note that the above safety precautions are not a complete list since we can't control the careless actions of the user, but it cites the major immediately related safety hazards that could happen. We strongly encourage the user to be use a reasonable and logical mindset when in use of this product.

4.2 ETHICS

As stated in the IEEE Code of Ethics, we have an obligation to our profession, "to accept responsibility in making decisions consistent with safety, health, and welfare of the public, and to disclose promptly factors that might endanger the public or the environment" [5]. This directly applies to the design of our toaster, since it is imperative that we provide appropriate warning signs which let the user know that the surface is hot and to disallow the insertion of objects which could lead to a short-circuit and initiate a fire. Not only that, but equally important is "to be honest and realistic in stating claims or estimates based on available data" [5]. Since our software component will contain an algorithm which will monitor the change of color of a respective bread, whether wheat or rye, we should make it apparent that this is not like the standard toaster which uses time-based method, but has

some signal processing aspect and a functional algorithm for handling varying scenarios/cases. Since the toaster is not a novel idea and we are redesigning its anterior designs we should, “improve [our] understanding of [the] technology; its appropriate application, and potential consequences” [5]. We see it as a necessary act to take apart a toaster and observe the basic functionality and design of old toasters, so that we could continue or improve its safety measures upon use. Due to this course’s excellent structure we will find it easy “to seek, accept, and offer honest criticism of technical work, to acknowledge and correct errors, and to credit properly the contributions of others” [5]. Unless we decide to skip weekly meetings with our TA’s and/or disregard the design review, then this ethical task will be trivial. Considering all that was expressed in the preceding paragraph we should be set to comply with the IEEE Code of Ethics.

References

[1] Xu, Y; Cui, B; Ran, R; Liu, Y; Chen, H; Kai, G; Shi, J (Apr 5, 2014). "Risk assessment, formation, and mitigation of dietary acrylamide: Current status and future prospects.". Food and Chemical Toxicology. 69C: 1–12.

[2] "Food Controversies—Acrylamide". Cancer Research UK. August 19, 2016. Retrieved 23 January 2017

[3] R.W.G Hunt. The Reproduction of Color (2nd ed.). Chichester: John Wiley & Sons, 2004.

[4] A.Kaushiki and A.Sharama, “RGB Color Sensing Technique”, *International Journal of Advance Research In Science and Engineering*, vol. 2, pp 78-87, September 2013.

[5] Texas Advanced Optoelectronic Solutions, “Color Light-to-Digital Converter” TCS34725 datasheet, Aug. 2012.

[6] “IEEE Code of Ethics,” Web, IEEE, accessed September 2016. [Online]. Available: http: //www.ieee.org/about/corporate/governance/p7-8.html