Cyclist Health Alert

Project Proposal

TA: Luke Wendt

Yuanqing Li
Yingzheng shi
Yutian sheng

ECE 445

February 9th, 2016

Table of Contents

1.Introduction

1.1Statement of Purpose……..3

1.2Objectives

1.2.1 Goals & Benefits……..……3

1.2.2 Features and Functions……..……3

2. Design

2.1. Block Diagram……4

2.2 Descriptions of Blocks

2.2.1 Power Supply…….…….……..5

2.2.2 Pulse Sensor…….…….……...5

2.2.3 Pressure Sensor…….…….……5

2.2.4 Accelerometer…….…….……5

2.2.5 Interface……..…….……...5

2.2.6 Warning and Emergency……..……..6

3. Requirements and Verifications

3.1 Requirements and Verifications……..6

3.2 Tolerance Analysis……...…..7

4. Cost and Schedule

4.1 Cost Analysis……..….7

4.2 Schedule and Division of Responsibilities……..……...9

1. Introduction

1.1 Statement of purpose

In the past, more than 24,000 exercise related injuries was reported each year. Safety is crucial and injuries should always be avoided. Currently, many cyclist protective system already exist. However, those systems primarily solely focused on awareness of others instead of reactive measures after accidents. A similar system called “Cycle Alert” was created by a British company that designed to prevent collisions with cyclists and increase driver awareness by making cyclists visible in vehicle blind spots. While the names of two projects are extremely similar, but the approach is different- one proactive another reactive. One of the few designs that was close to our project is the ICEdot Crash Sensor for Helmet. Similar to our project it detects critical impacts that may leave cyclist incapacitated. It also has a cell phone app serving as user interface. The difference of our design and ICEdot Crash Sensor for Helmet lies in the sensors. Our impact sensor will be installed on the bike; we will also include a pulse sensor and a pressure sensor. Our goal is to design a bicycle device that could detect the physical condition and will sent alert if the physical condition fell below a threshold.

1.2 Objective

1.2.1 Goals & Benefits:

- Use green energy to protect environment
- Notice the biker when they under poor physical condition
- Call emergency if they are thrown off or in collision

1.2.2 Features & Functions:

- We have two power sources, we will generate electricity from mechanical source of bicycle, a battery will be used as well
- The pulse sensor will be inside the bike handle in order to detect heart rate
- The pressure sensor will be built in the saddle and both pedals
- The accelerometer will be used for collision detection
- Users can use an app in their smartphone to control the system

- All sensors are connected to the power system, electricity obtained from mechanical energy can recharge the battery

- User should enter their age at the beginning in order to help the system to set the maximum heart rate
- The system will send the biker a warning if their heart reach the maximum value
- The system will consider that the person is thrown off the bike unless he or she hits the button in the app if all pressure sensors detect a small value
- The system will consider that the person is in collision when the acceleration is changed immediately
- In the two circumstances above, the system will call emergency in 60 seconds. Users should have enough time to cancel the action.
- The delayed emergence response system can be turn off by users' choice. For example, they can only use this feature when they are going to cycle in some unsafe places or somewhere with few people.

2. Design

2.1 Block Diagram

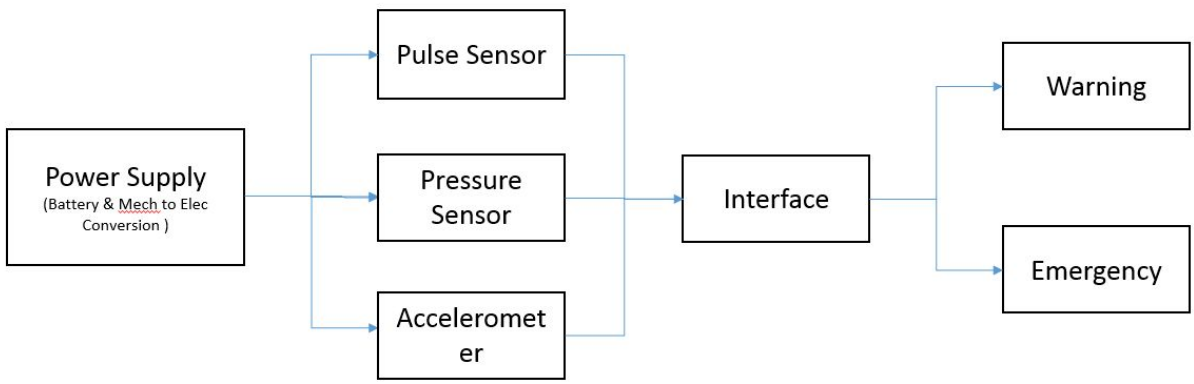

Figure 1. High level block diagram of the system

2.2 Block Descriptions

2.2.1 Power Supply

Idealy, the mechanical energy generated by the pedals will be converted to electrical energy and then stored into the battery. However, due to the inconsistency of mechanical energy and low efficiency of the conversion rate, a 5V back-up battery will also be used.

2.2.2 Pulse Sensor

The sensor will be put on the handle and connects to the power supply. The pulse sensor will collect the data to compute the heart rate of the cyclist and then transmit the rate to the user's phone.

2.2.3 Pressure Sensor

The pressure sensors will be put on the saddle and pedals to indicate actual values. The power supply will provide the energy used by sensors. Once all three sensors received pressures of 0, the system will think the biker is thrown off from the bike and the delayed emergency response system will work.

2.2.4 Accelerometer

The accelerometer will be put on the body of the bike, which is obtained power by power system. When the accelerometer detects the large change of acceleration during a short time, the system will think the user in a collision is and the delayed emergency response system will start to work.

2.2.5 Interface

The data collected by the sensors will be transmitted to an app on the user's phone. Corresponding decisions are made by the app due to different circumstances. For example, if a collision is happened, an emergency phone call will be dialed. If the heart rate continues to stay in a high level (compared to the average value of heart rate in cyclist' age interval), some kind of warning will alert the cyclist to stop the exercise. The cyclist can also choose to turn off the warning and emergency function if the user thinks he/she is in safe situation.

2.2.6 Warning and Emergency

The app on the phone will control when to alert the cyclist and make the emergency call. The data will be transmitted through bluetooth and eventually be analysed by the app to make decisions.

3. Requirements and Verifications

3.1 Requirements and Verifications

Requirement	Verification
Power Supply a. Supply 5V +/- 0.25V with 1A +/- 0.25A b. Efficiency >= 80%	a. First use multimeter to draw 0A and measure the voltage. Then draw 1A and measure the voltage again. The values should be within the bounds. b. Place a load and measure the current delivered to the load.
Pressure Sensor a. The resistance changes when pressure changes. Therefore voltage should change properly as the resistance changes.	a. Apply weight on the sensor and measure the voltage across the circuit. The value should reflects the change of pressure.
Pulse Sensor a. Correct reading of heart rate b.Vin < 5V +/- 0.25V, I < 4mA +/- 0.02A	a. Clip the pulse sensor to earlobe or fingertip and plug it into 5V Arduino and we can get the heart rate reading. b. Measure the heart rate by ourselves or using smartphone app Safe Health. Then compare the value with the one measured by pulse sensor. Theoretically two values should be nearly the same.
Accelerometer Measure the acceleration correctly	a. Attach the accelerometer together with a mental ball. b. Drop the mental ball from a table that is around 1.5-meters high. c. Read the value on the

	accelerometer, it should be near the g, which is 9.78 m/(s^2)
Bluetooth a. Can transmit the data in giving time	a. First need to check if bluetooth and the smartphone can be connected. b. Then send a series of number to the smartphone. Check the number showing on the smartphone to see if they match the original input numbers.

3.2 Tolerance Analysis

To successfully run the device smoothly, we need to provide continuous power supply. The estimated power of our device would be 2W at most and we have a backup battery of 5W(5V*1A). But we want to generate energy as much as possible from pedaling. However, the energy conversion efficiency is relatively low: $\eta = Pout/Pin$. After doing some research, approximately 50% of the energy generated by riding a bike can convert to mechanical energy. Then the mechanical to electrical energy conversion ratio is 60% at top. So the actual power generated by riding the bike would be: Pin*50%*60%=0.3Pin. A average rider can produce up to 200W for an hour. So Pact=60W/h=0.0167W/s. So there is actually no way we can power up the device solely by pedaling. Either we have to decrease the power consumption or somehow increase the conversion efficiency. This will be the biggest challenge in our project.

4. Cost and Schedule

Labor

Name	Hours Invested	Hourly Rate	Total = Hourly Rate x 2.5 x Total Hours Invested
Sheng	300	$45.0	$33,750
Shi	300	$31.5	$23,625
Li	300	$31.5	$23,625
	900		$81,000

Parts

Item	Quantity	Total Cost ($)
Pressure Sensor Adafruit - Pressure Sensor Development Tools 1075	2	28
Bluetooth	1	55
Pulse Sensor Onset S-UCC-M001 Electronic Switch Pulse Input Adapter w/ 1m Sensor	1	75
Accelerometer Measurement Specialties ACH-01-04/10 Accelerometers	1	26.5
Rechargeable Battery 12-Volt Prong-Top Rechargeable Battery	1	22
Grand Total		206.5

Grand Totals

Section	Total
Parts	$206.5
Labor	$81,000
Grand Total	$81,206.5

4.2. Schedule and Division of Responsibilities

Week	Task	Delegation
2/8	Proposal	Li
	Proposal	Shi
	Proposal	Sheng
2/15	Prepare Mock Design control unit planning	Li
	Prepare Mock Design power system planning	Shi
	Prepare Mock Design pressure planning	Sheng
2/22	Ordering Equipment Start Writing Control Unit	Li
	Start working on power system(generator part)	Shi
	Start working on pressure Sensor	Sheng
2/29	Continue on Control unit and start debugging	Li
	Continue on power system (battery part)	Shi
	Equipment testing start working on pulse sensor	Sheng
3/7	Start combining Control Unit(wiring of each part)	Li
	Combining generator and battery section	Shi

	Start working on bluetooth communication	Sheng
3/14	Finishing Control Unit and combining each unit	Li
	Start writing cellphone Apps	Shi
	Debug bluetooth communication	Sheng
3/21	Spring BREAK!	Li
	Spring BREAK!	Shi
	Spring BREAK!	Sheng
3/28	Combining all parts	Li
	App debugging	Shi
	initial testing of sensor	Sheng
4/4	system wiring debugging	Li
	ordering extra equipments	Shi
	sensor connection debug	Sheng
4/11	Possible revising	Li
	Cellphone connection wiring and App debugging	Shi
	Second test of sensor and overall system test	Sheng
4/18	Debug/Touch Up/Optimization	Li
	Debug/Touch Up/Optimization	Shi
	Debug/Touch Up/Optimization	Sheng
4/25	FINAL : Demos and	Li

	Presentation	
	FINAL : Demos and Presentation	Shi
	FINAL : Demos and Presentation	Sheng
5/2	FINAL : Demos and Presentation	Li
	FINAL : Demos and Presentation	Shi
	FINAL : Demos and Presentation	Sheng