Deep Tunnel Mobilization

ECE 445 / Team 26

Youssef Elmokadem, Nisha Kolagotla, Jonathan Young

Objectives

Objective

ABE

- Physical components to pull the tunnels.

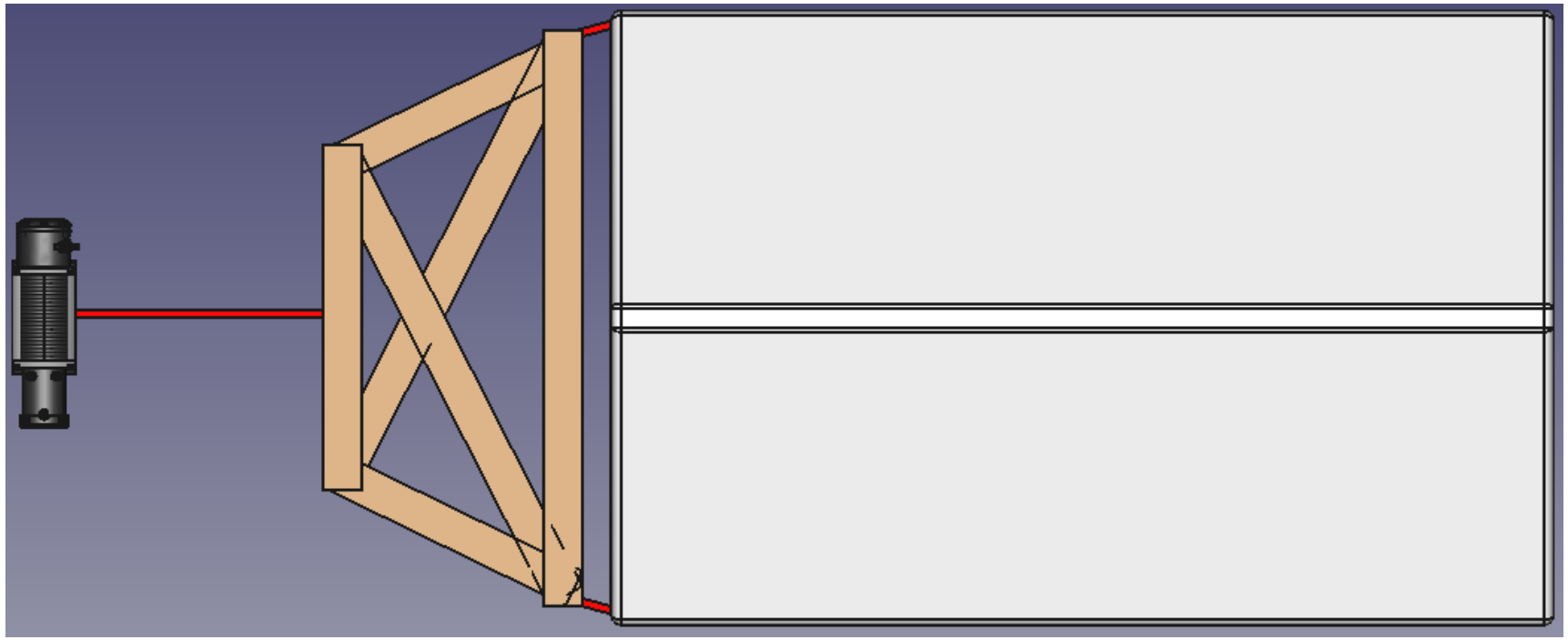

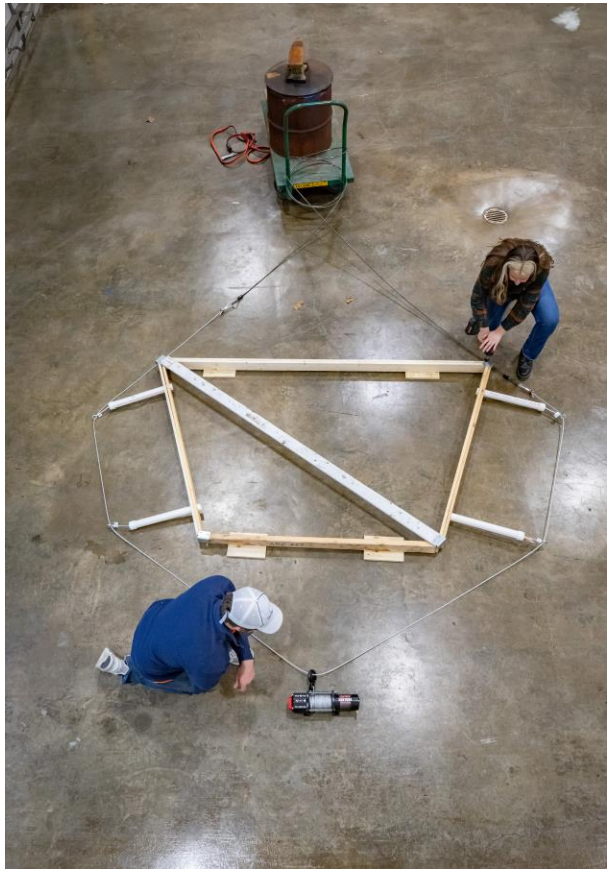

Objective

1. Save winch operator time.

2. Turn off the winch if tension is high.

   Protect

   Current sensor

3. Turn off the winch once the object being pulled reaches a location.

   End of Track

   Ultrasonic

Objective

Line Pull lb. (kg.)		Line Speed fpm (mpm)	
0	(0)	13.3	(4.1)
1000	(454)	8.3	(2.5)
2000	(907)	4.1	(1.2)
2500	(1134)	2.7	(0.8)

Time actively pulling = 96ft /8.3fpm

= 11.57 minutes

Out the box switch

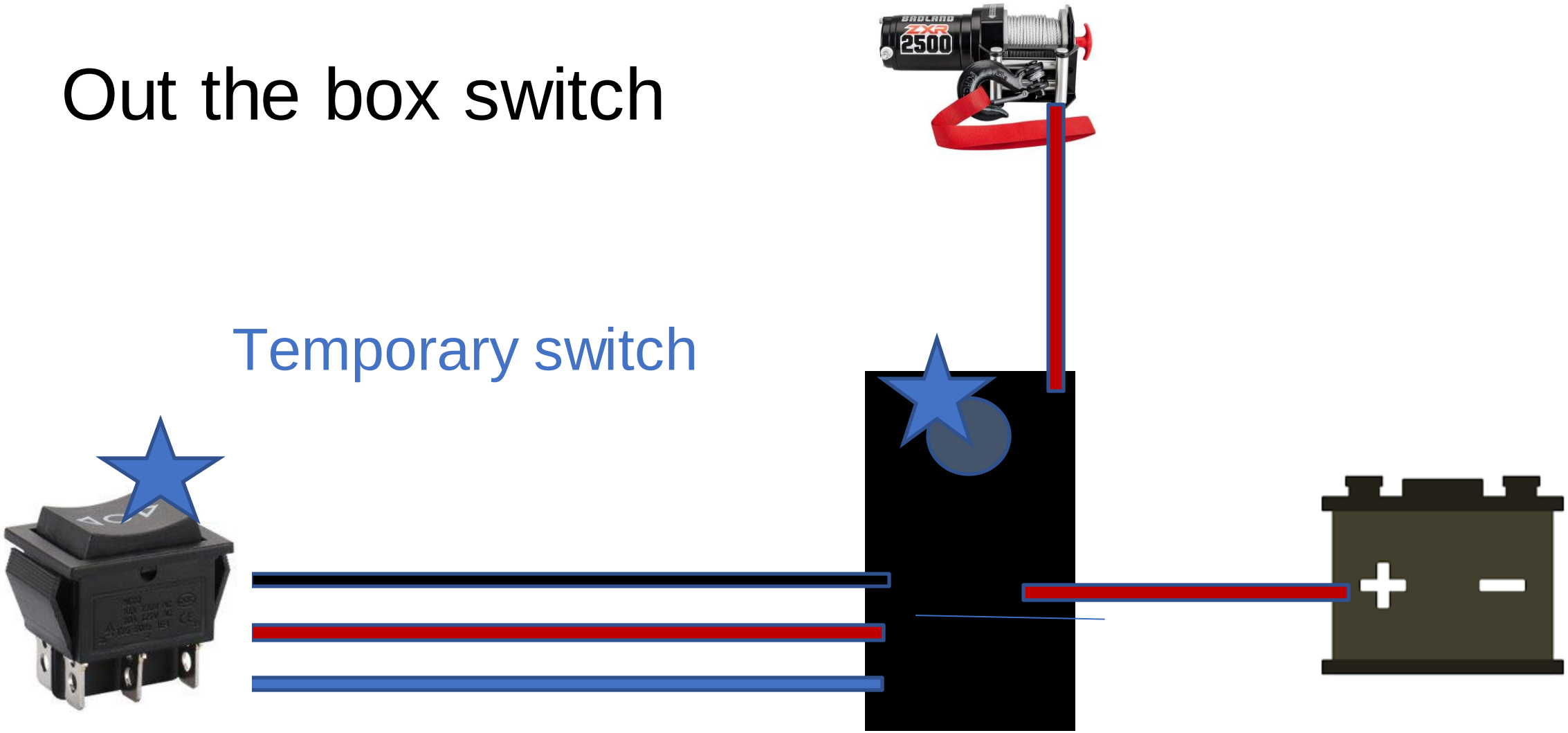

Objective

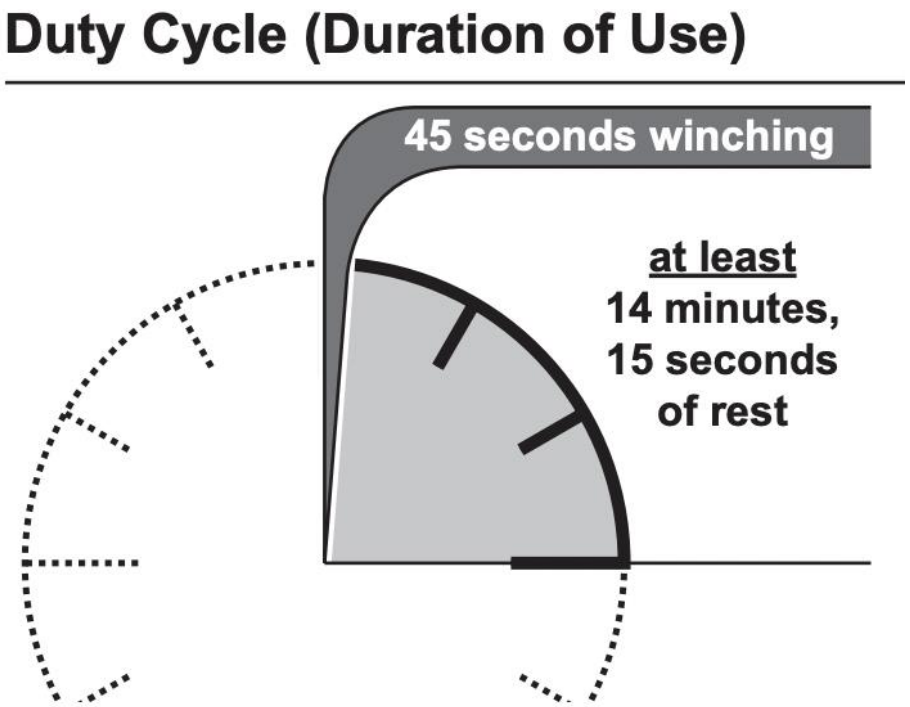

~~11.5 Min~~

3.85 Hours

Objective

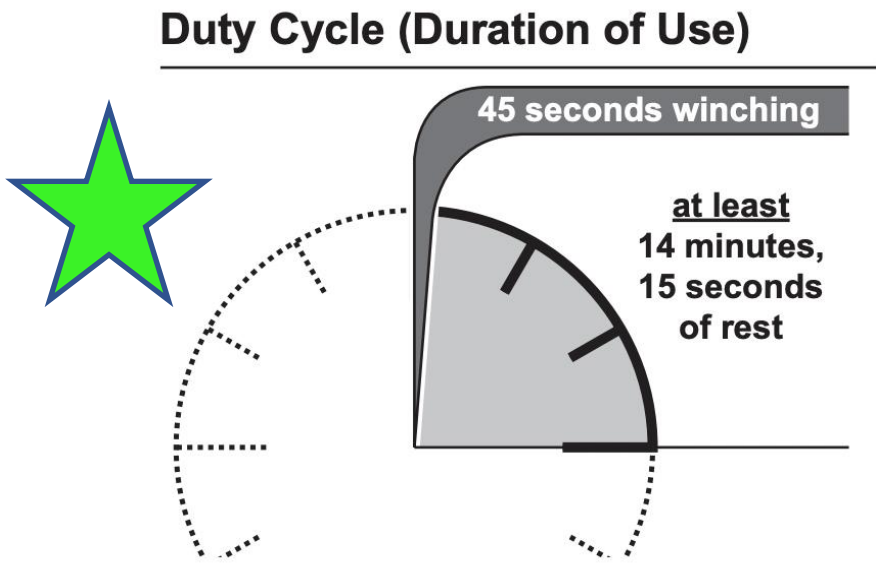

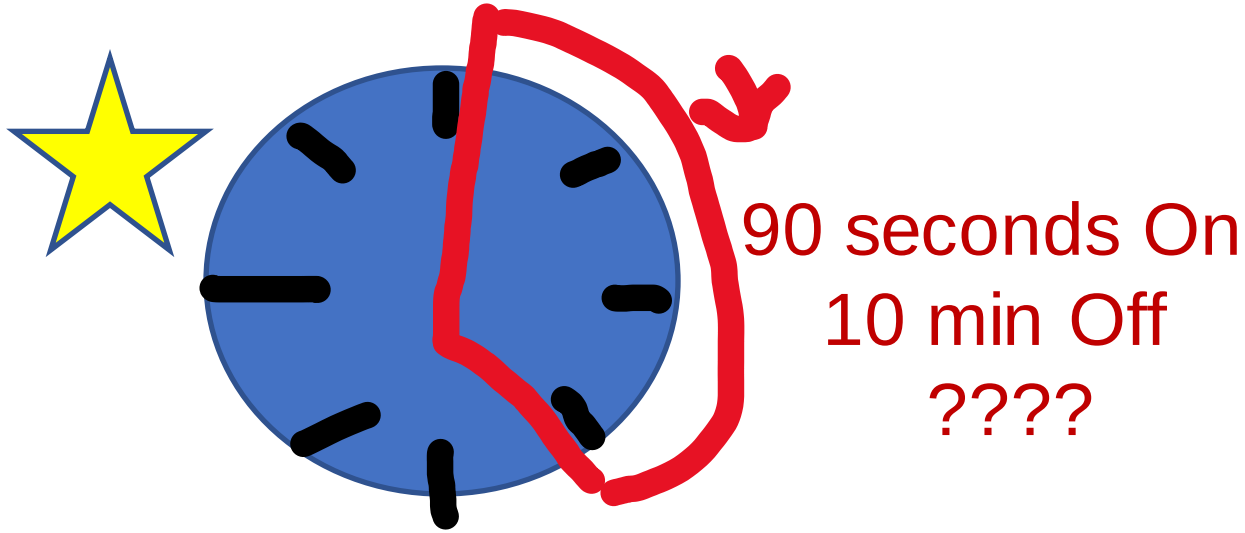

Line Pull lb. (kg.)	Line Speed fpm (mpm)	Amp Draw (@ 12V)
0 (0)	13.3 (4.1)	10
1000 (454)	8.3 (2.5)	55
2000 (907)	4.1 (1.2)	106
2500 (1134)	2.7 (0.8)	132

Solution

Physical Construction

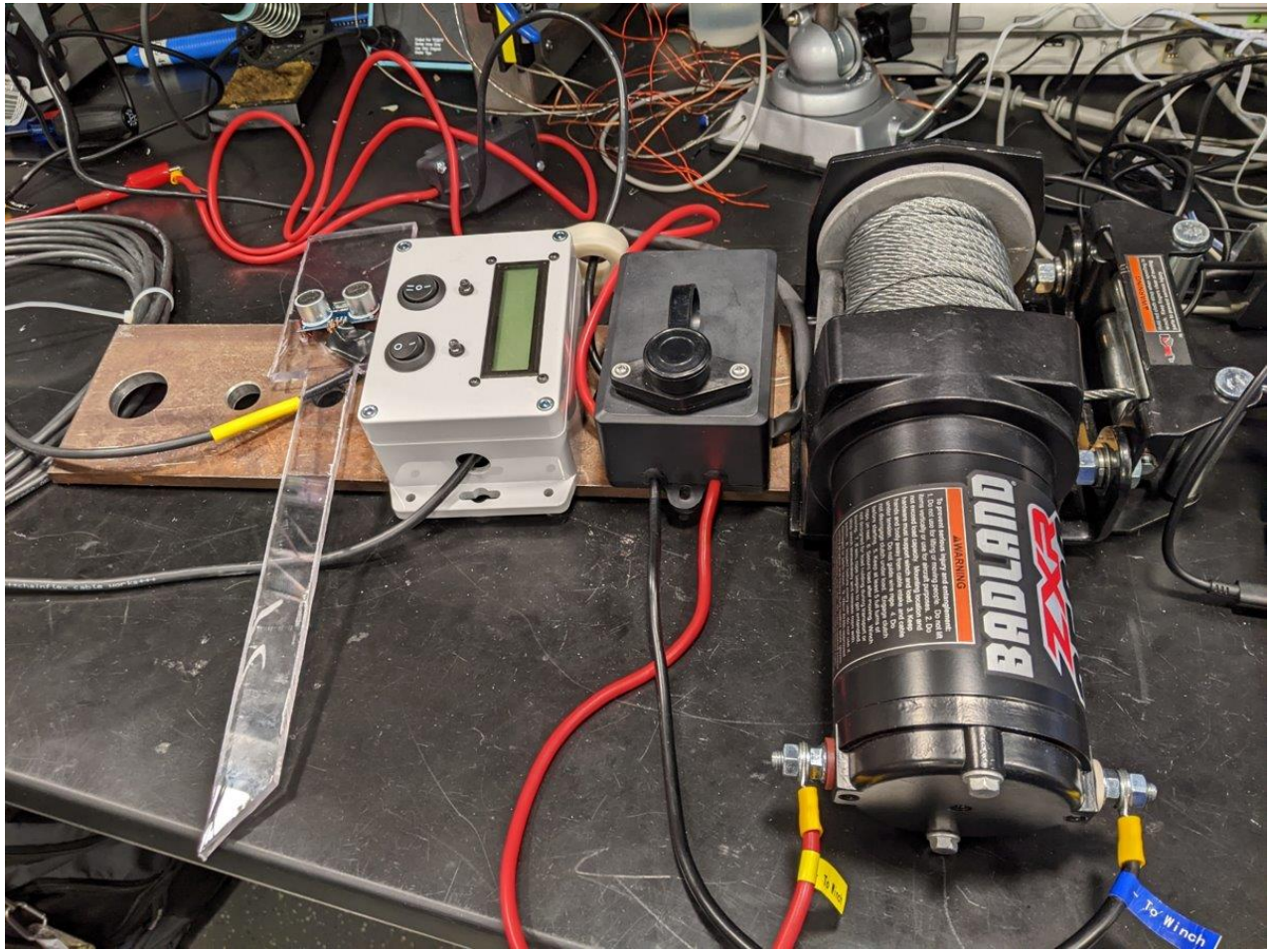

Internal Pictures

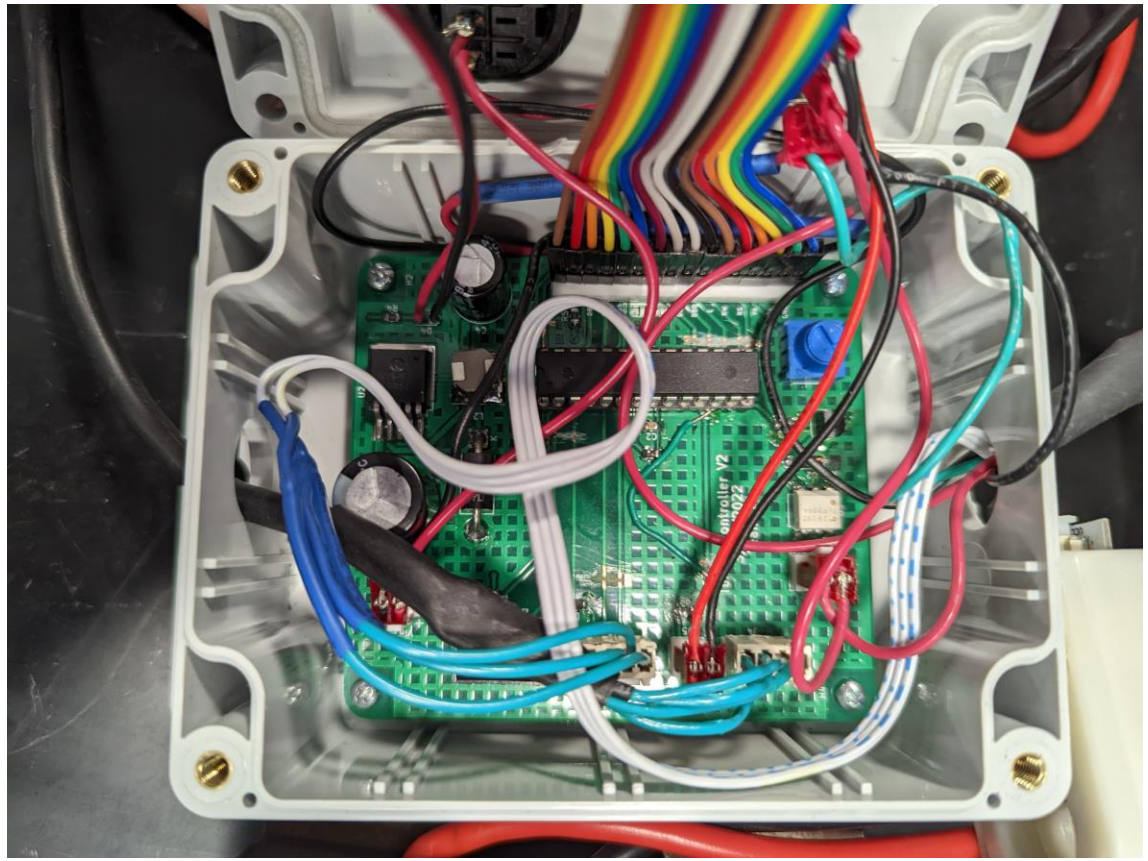

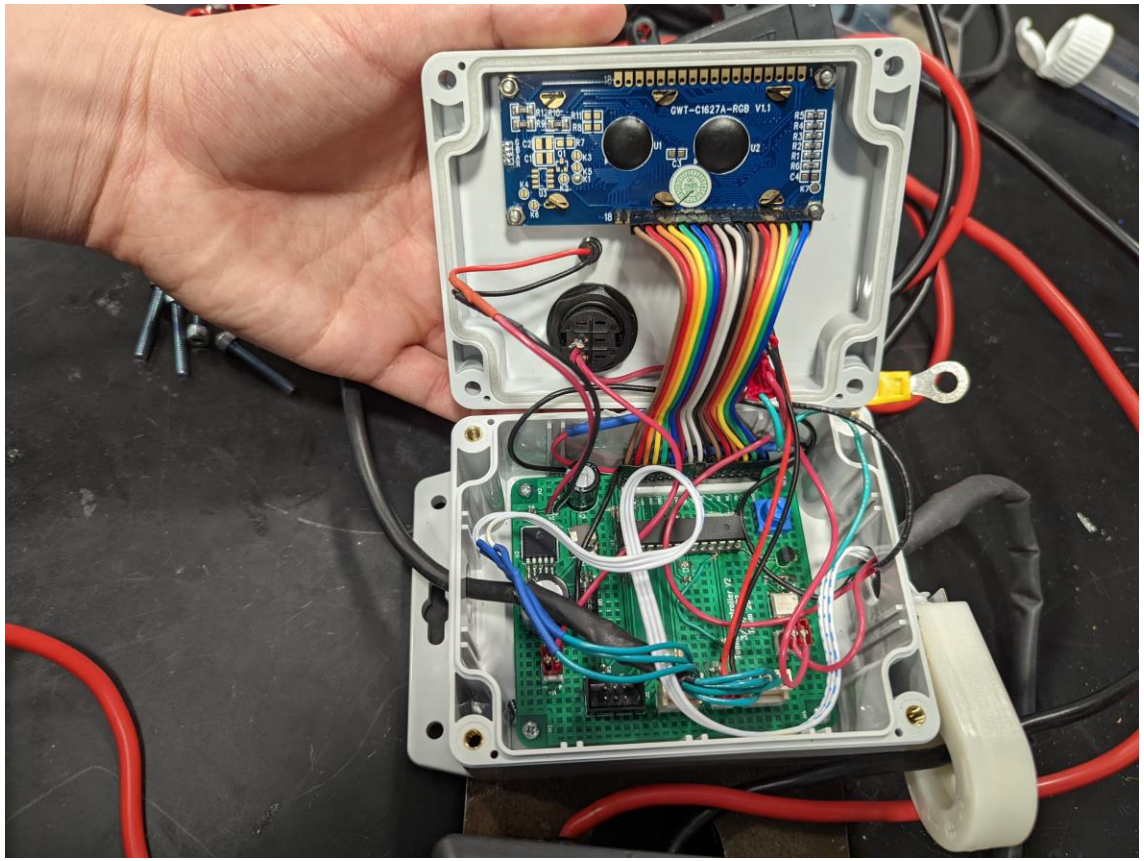

Block Diagram

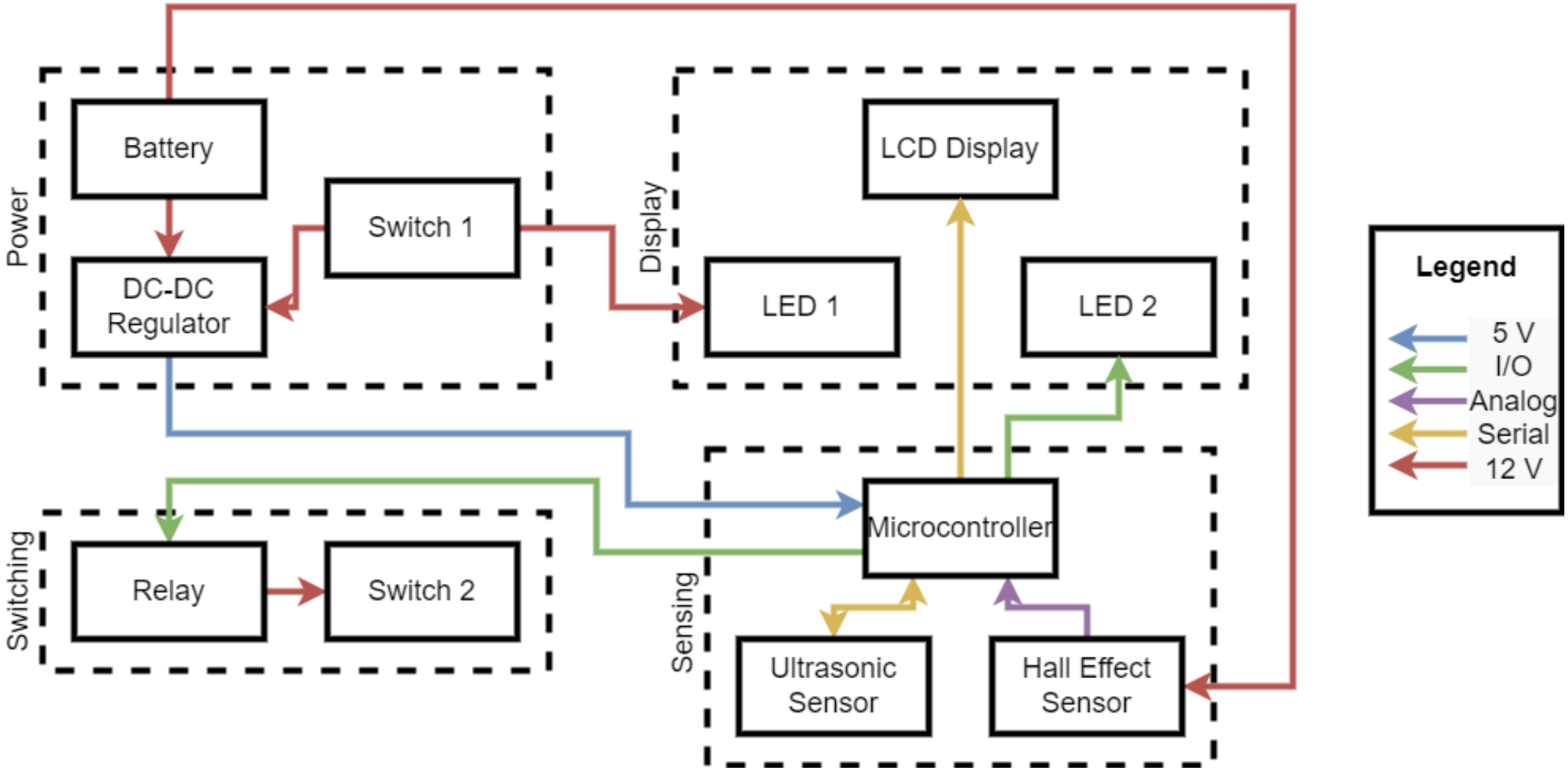

Subsystems

Power

Requirements	Verifications
The DC-to-DC converter can regulate an 8V - 25V input to a 5V ± 5% output.	Sweep the input voltage from 8V to 25V an measure the output voltage with a multimeter.
The converter can provide enough power to operate the microcontroller during winch operations	Connect the converter to a power supply and monitor the system to ensure the system has proper functionality

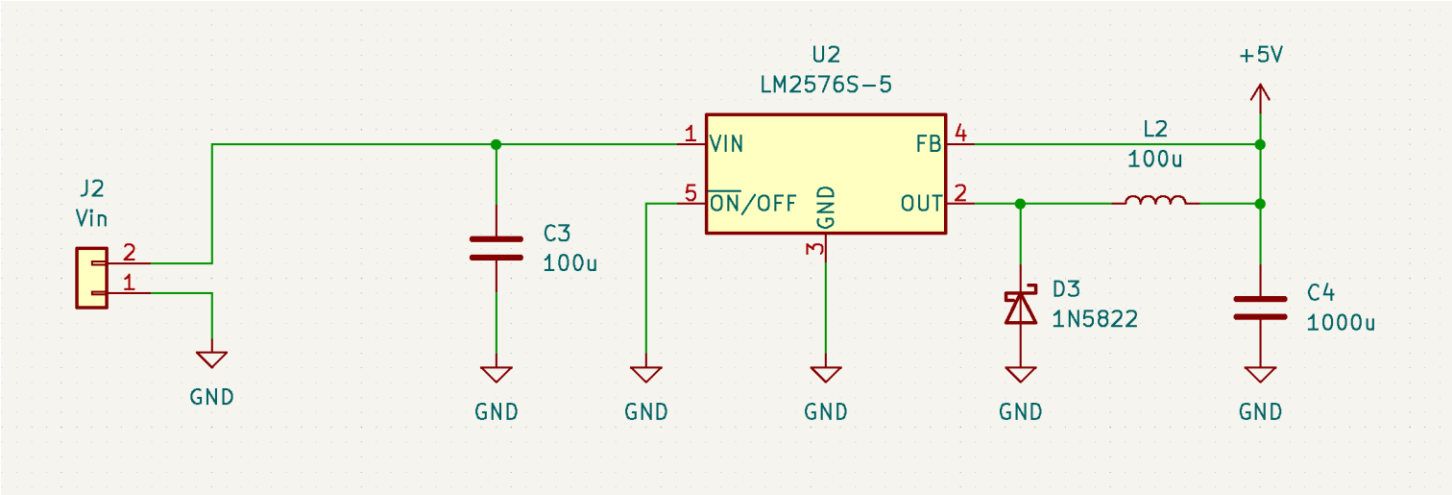

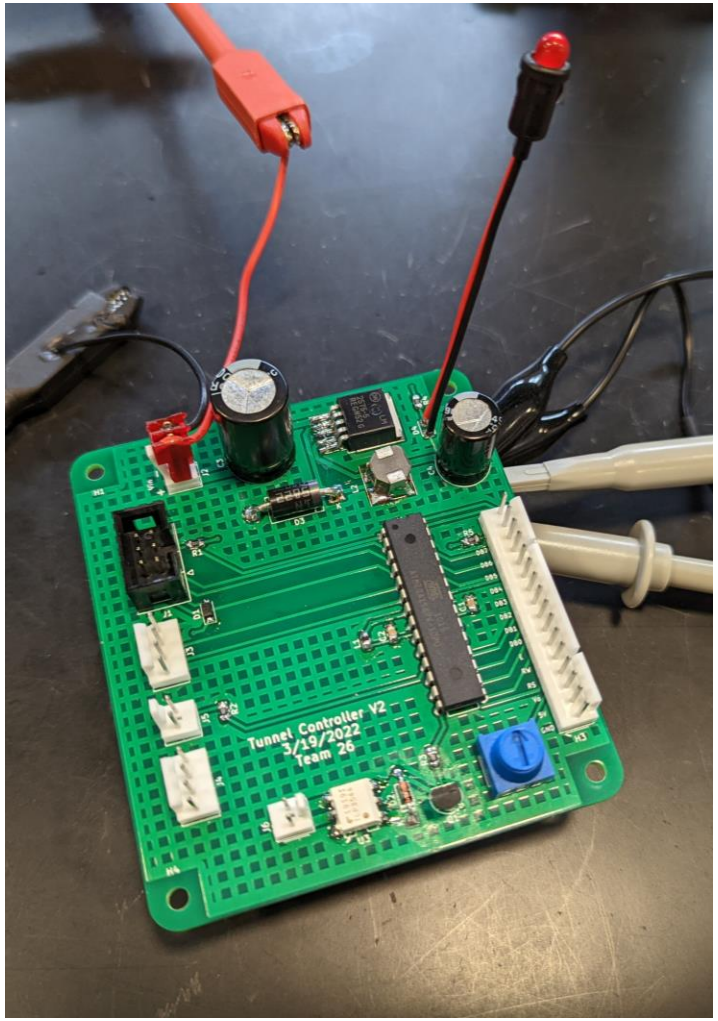

Display

Requirements	Verifications
Display Ultrasonic Sensor	Measure the distance from the ultrasonic sensor to a flat object and compare the value against the displayed value.
Display Current	While the winch is running compare, the displayed value with the current drawn from the power supply.
Display Timer	While the system is powered on, start a stopwatch on another device and compare the time with the displayed value.
Display State	Ensure that the state is updated when the minimum distance or the current limit is reached.

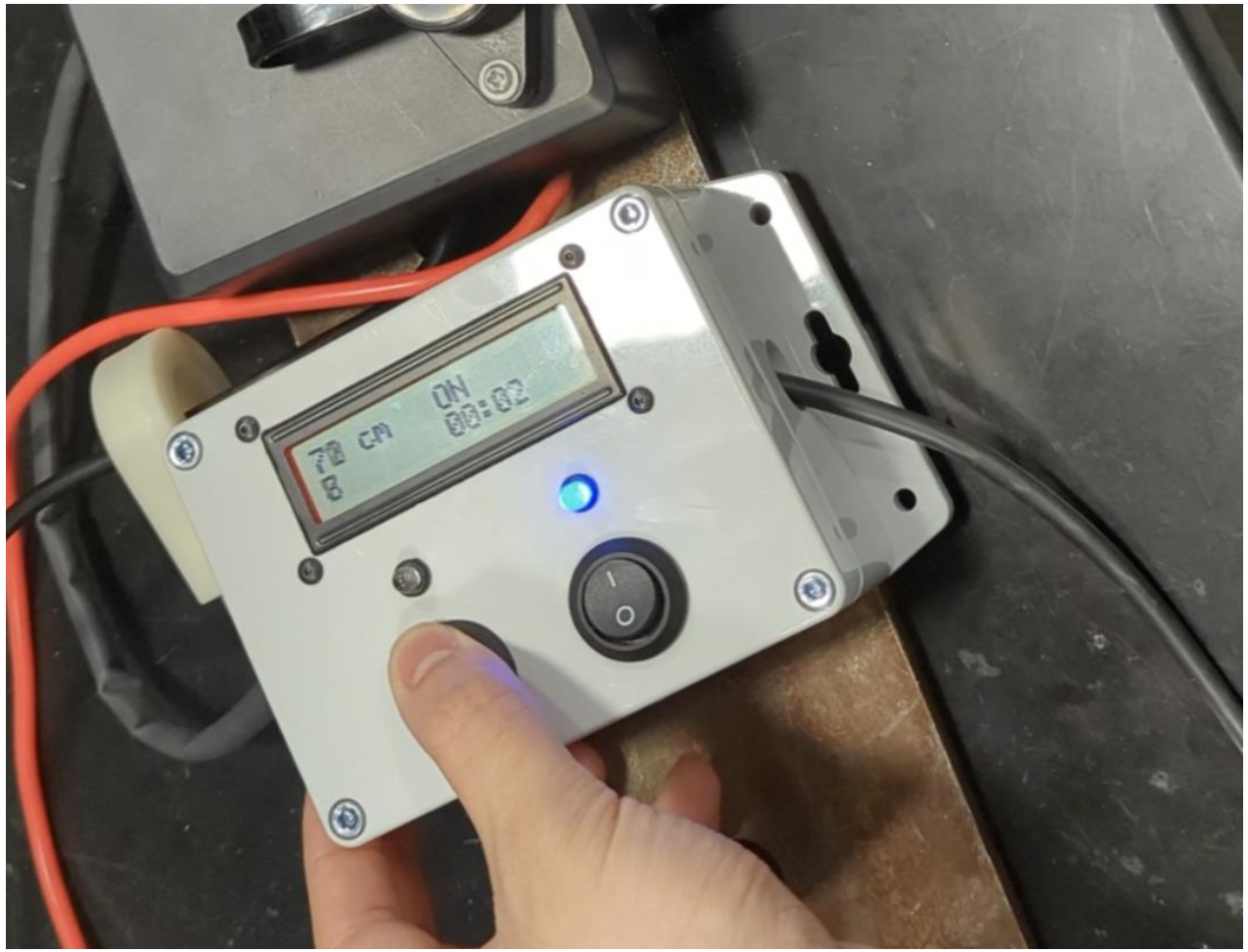

Out the box switch

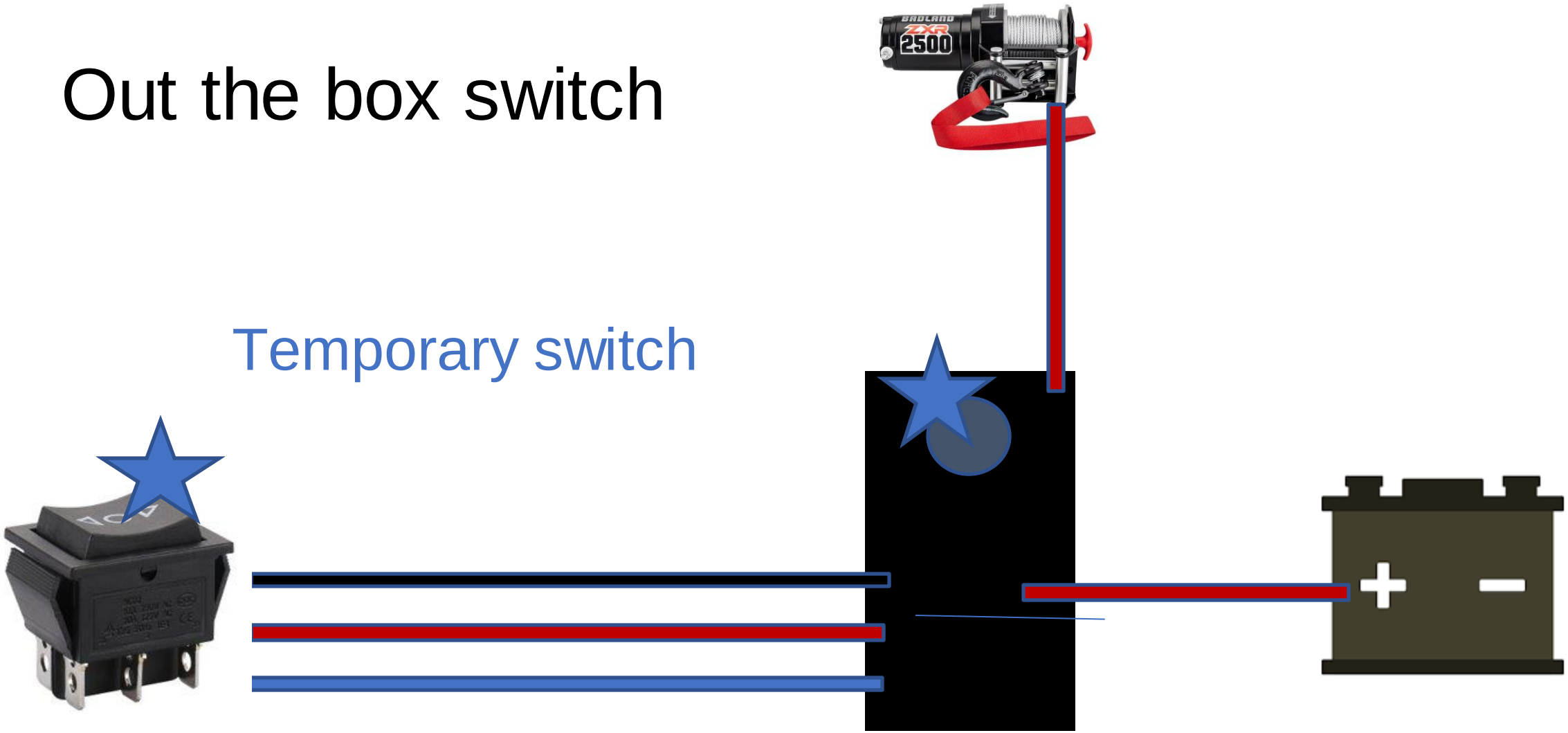

Switching

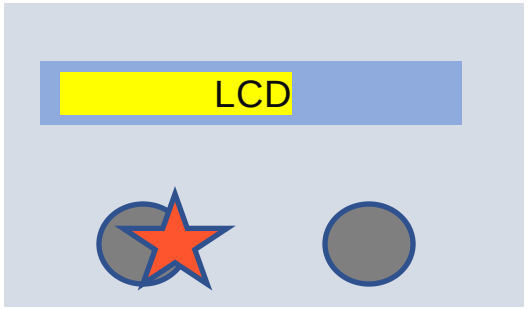

Latching switch

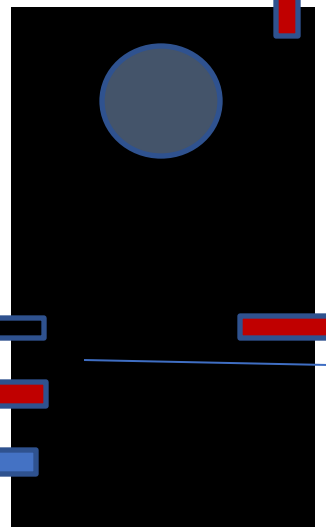

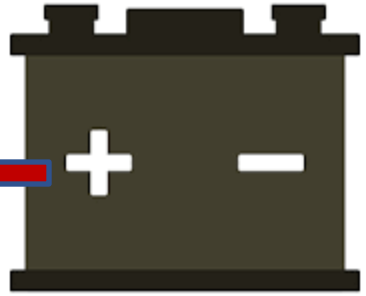

What about?

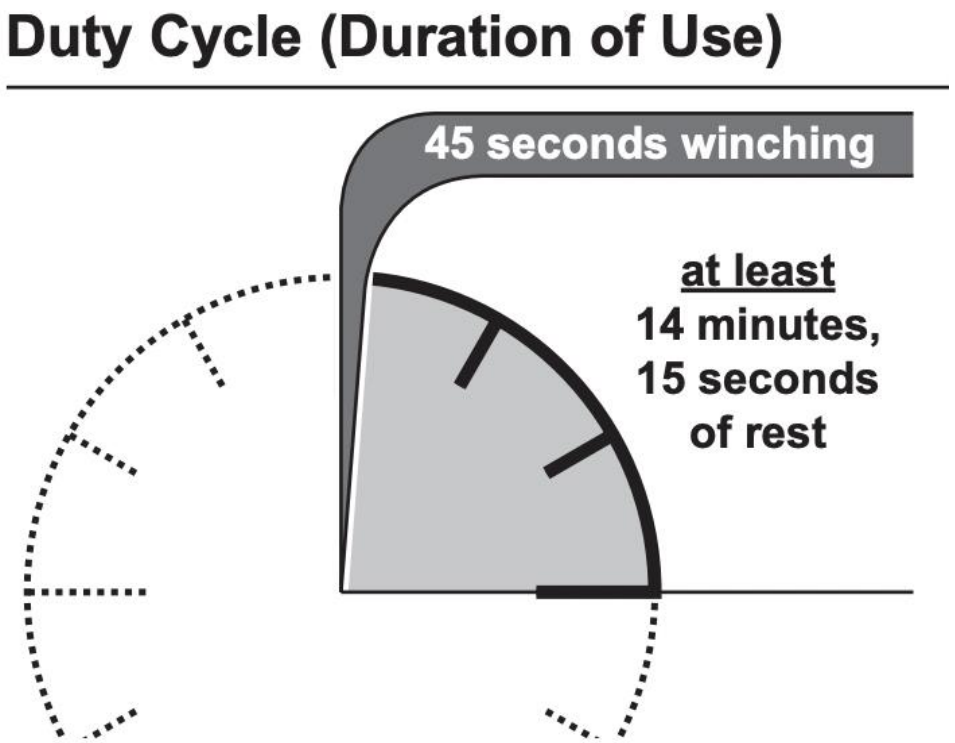

End of track

High winds or other obstruction?

Switching

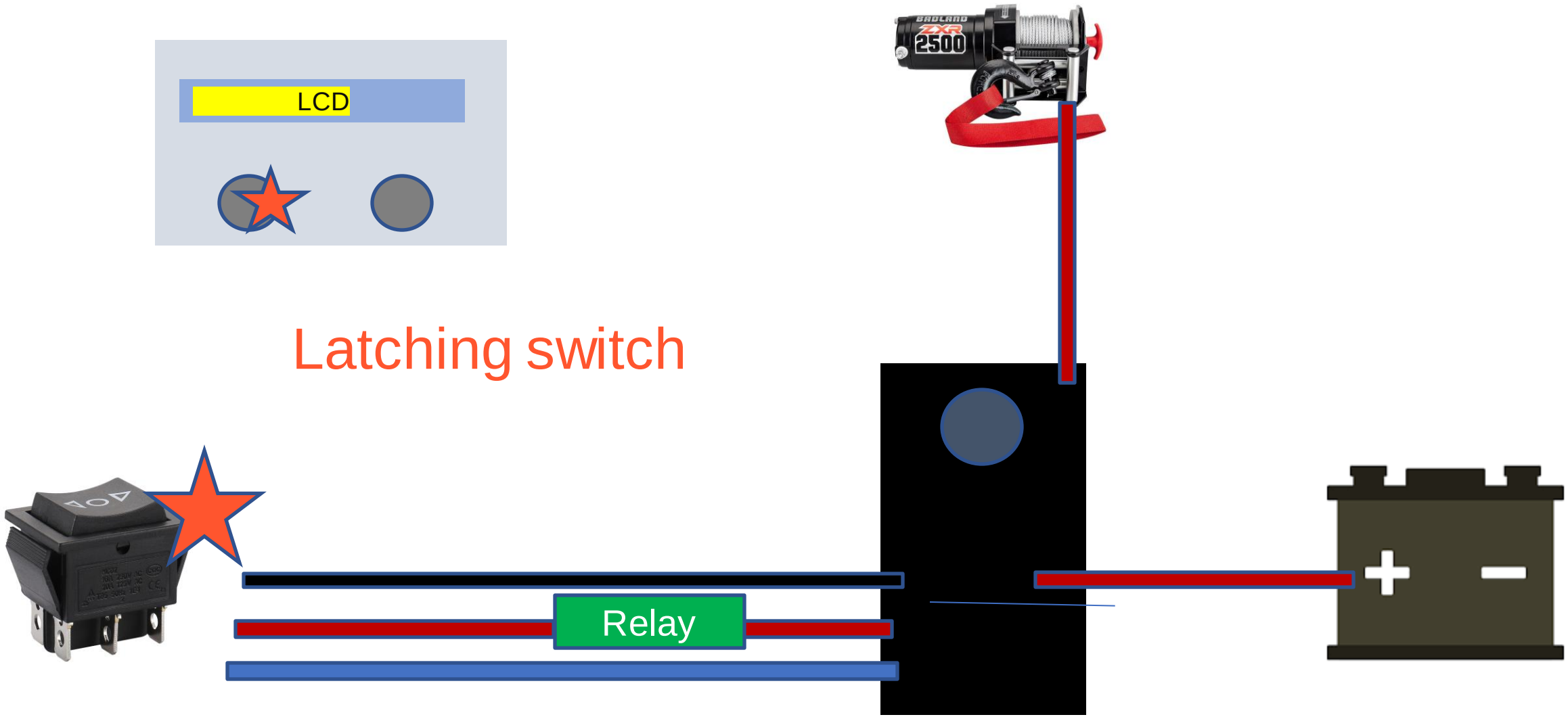

Switching

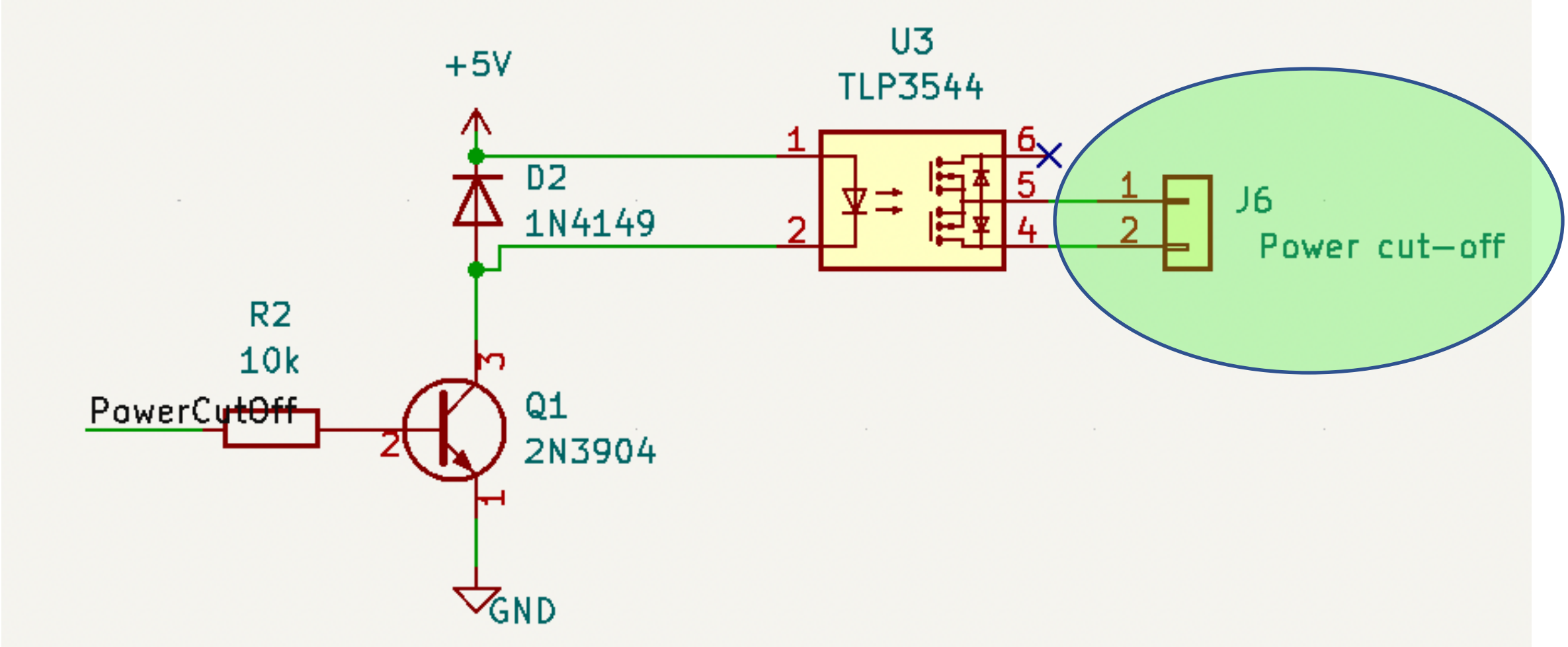
+5V
U3
TLP3544
D2
1N4149
1
2
6
5
4
1
2
J6
Power cut-off
R2
10k
PowerCutOff
3
2
1
Q1
2N3904
GND

Switching

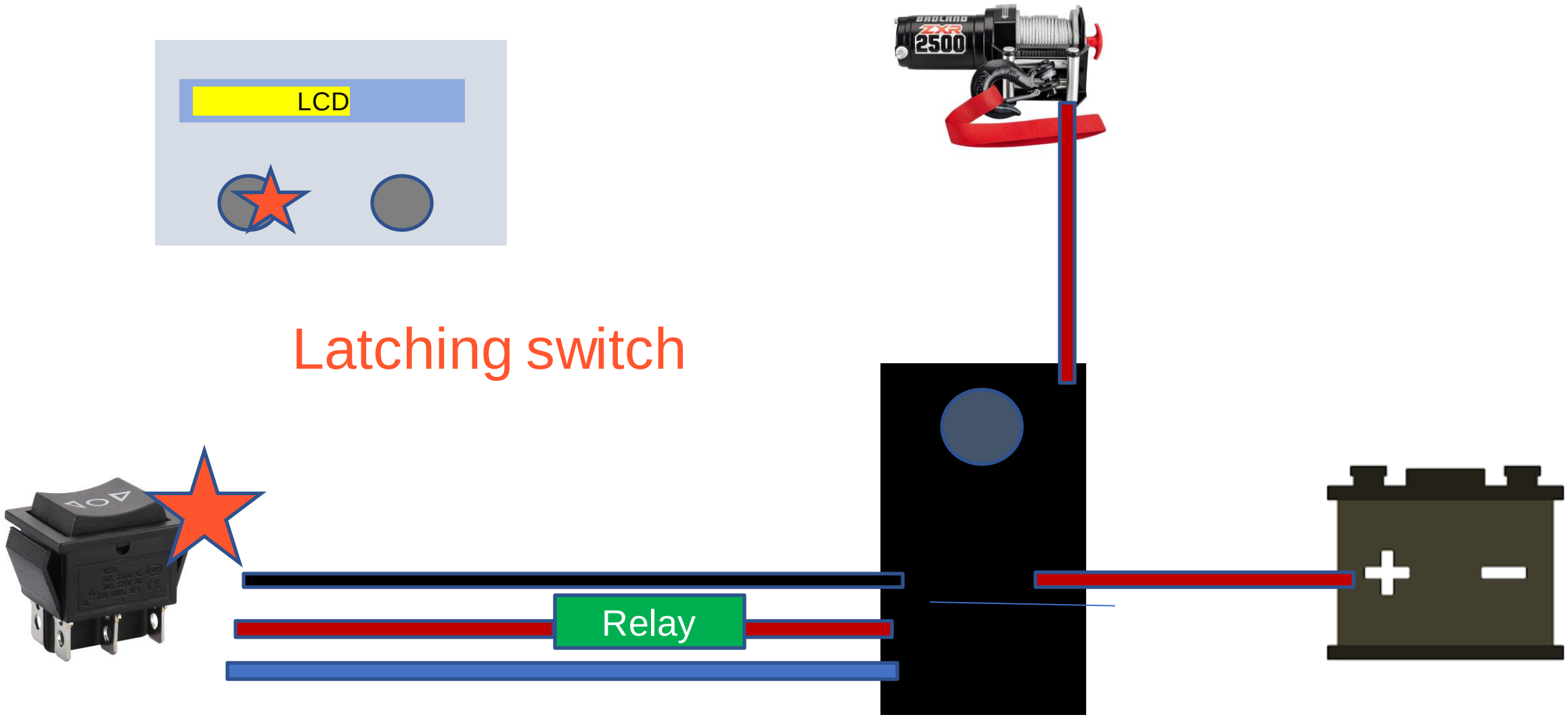

Sensing Objective 1: Measure mechanical load

Why?

Protection for winch

Wire breaks before circuit breaker

Protection for deep tunnel

Sensing

One option considered: Tension transducers (aka wire tension sensor)

Obstructive, more for winch operator to worry about.

Cost high at our scale.

Sensing

Instead: Current sensor

300A sensor would require analog signal processing.

100A sensor ✓

Sensing Objective 1: Mechanical load measured ✓

Line Pull lb. (kg.)		**Line Speed** fpm (mpm)		**Amp Draw** (@ 12V)
0	(0)	13.3	(4.1)	10
1000	(454)	8.3	(2.5)	55
2000	(907)	4.1	(1.2)	106
2500	(1134)	2.7	(0.8)	132

Sensing

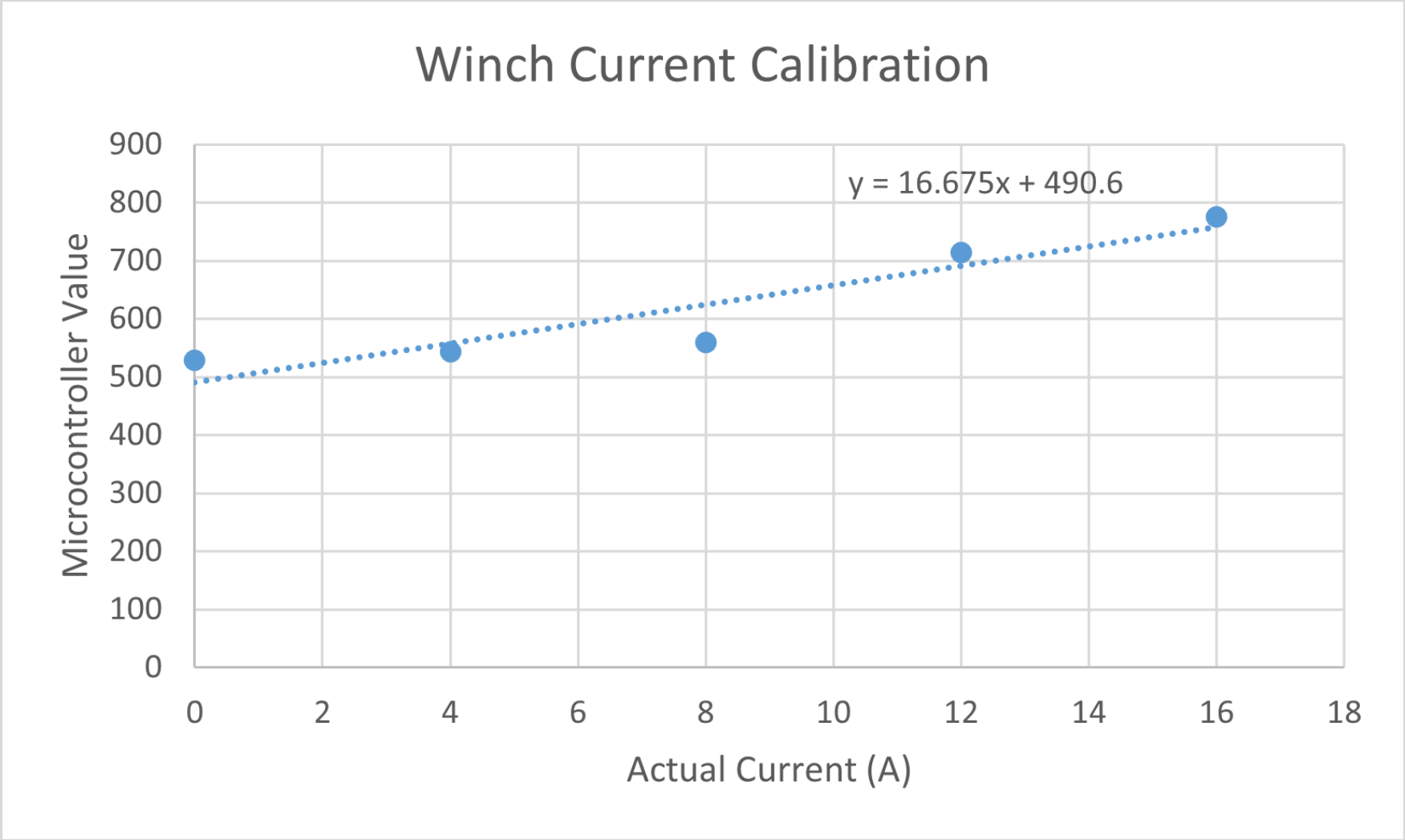
Winch Current Calibration
y = 16.675x + 490.6
Microcontroller Value
900
800
700
600
500
400
300
200
100
0
0
2
4
6
8
10
12
14
16
18
Actual Current (A)

Sensing

Requirements	Verifications
The ultrasonic sensor can be mounted at the end of the field.	Place the ultrasonic sensor at the end of the field and test range of the sensor. Ensure that the sensor does not change position with the vibration from the winch or light wind speeds less than 5 mph.
The current sensor can read the winch current	While the winch is running, compare the displayed value with the current value from a current meter. Check that this holds for both directions during winch operation.

Sensing

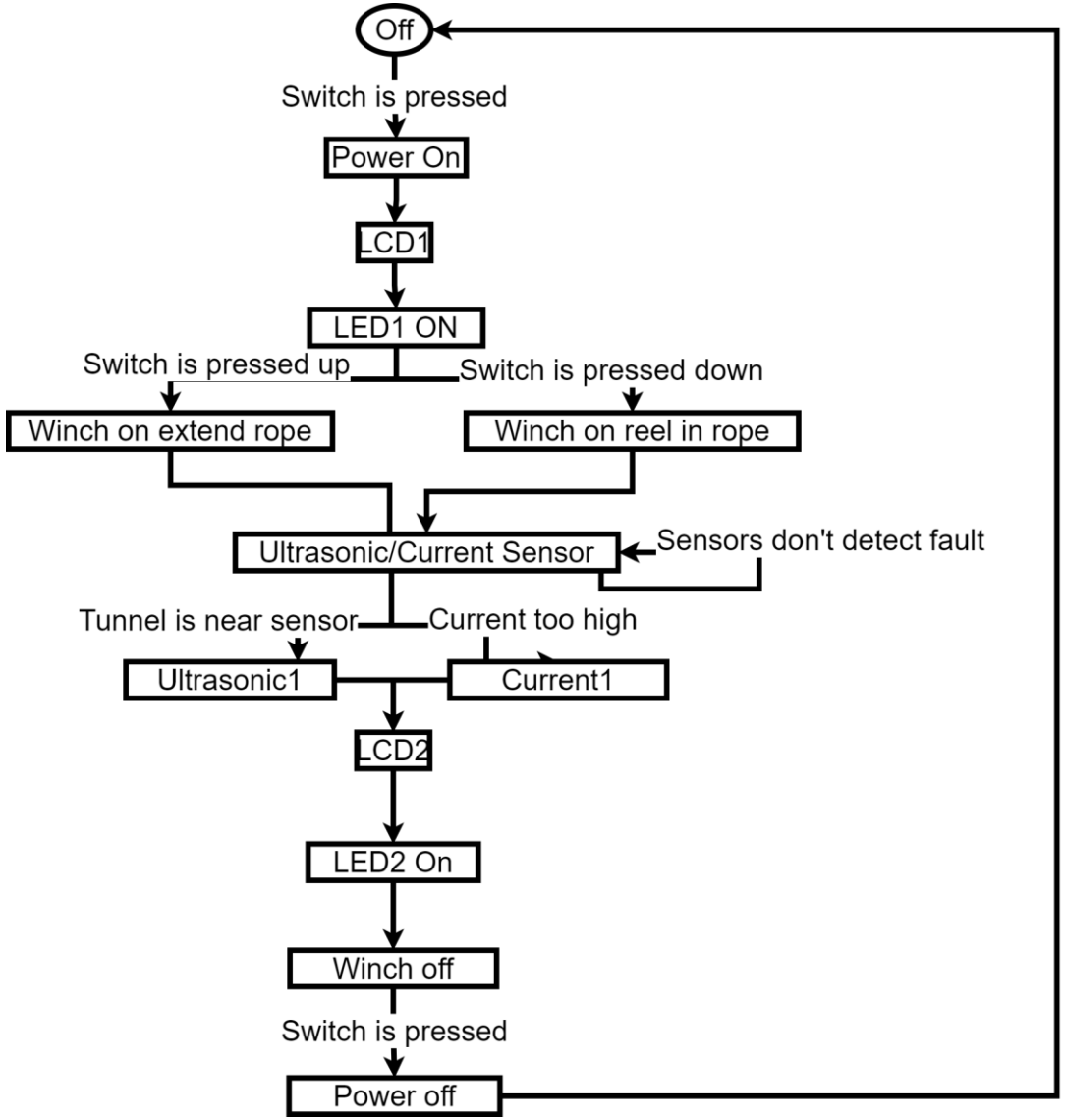
Off
Switch is pressed
Power On
LCD1
LED1 ON
Switch is pressed up
Switch is pressed down
Winch on extend rope
Winch on reel in rope
Ultrasonic/Current Sensor
Sensors don't detect fault
Tunnel is near sensor
Current too high
Ultrasonic1
Current1
LCD2
LED2 On
Winch off
Switch is pressed
Power off

Conclusions/Improvements

Conclusion

- Device would pull the tunnels at the SFF with more precaution than the off the shelf winch.

- Less demanding of the user's time.

Improvements

- Adjust current sensor cut off value with a pot.
- Surface Mount Microcontroller
- Bluetooth with phone app
- Cable grips
- Bigger case
- Case for Ultrasonic sensor
- Adjust duration of use duty cycle with pot

PCB Layout Improvements

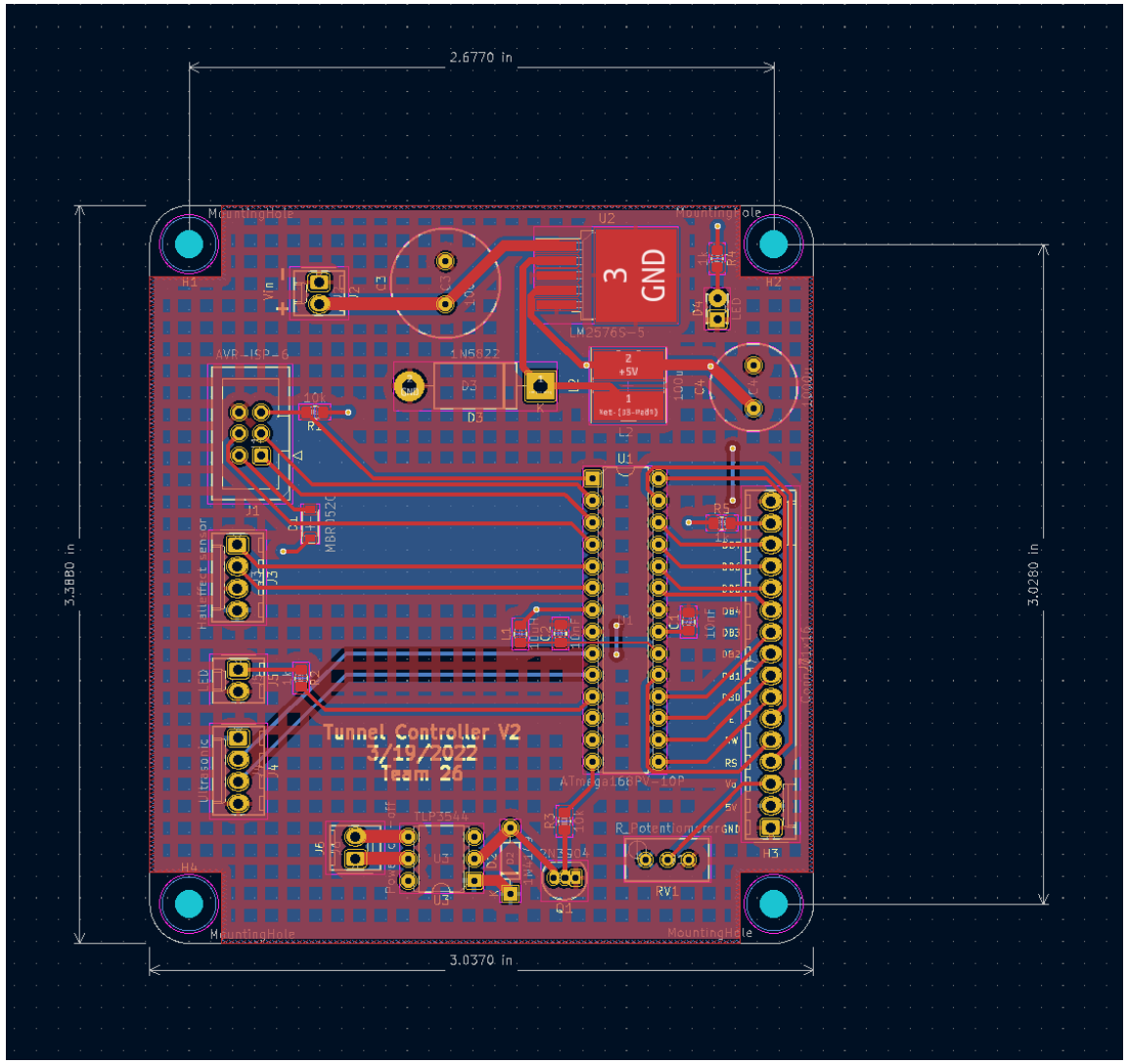

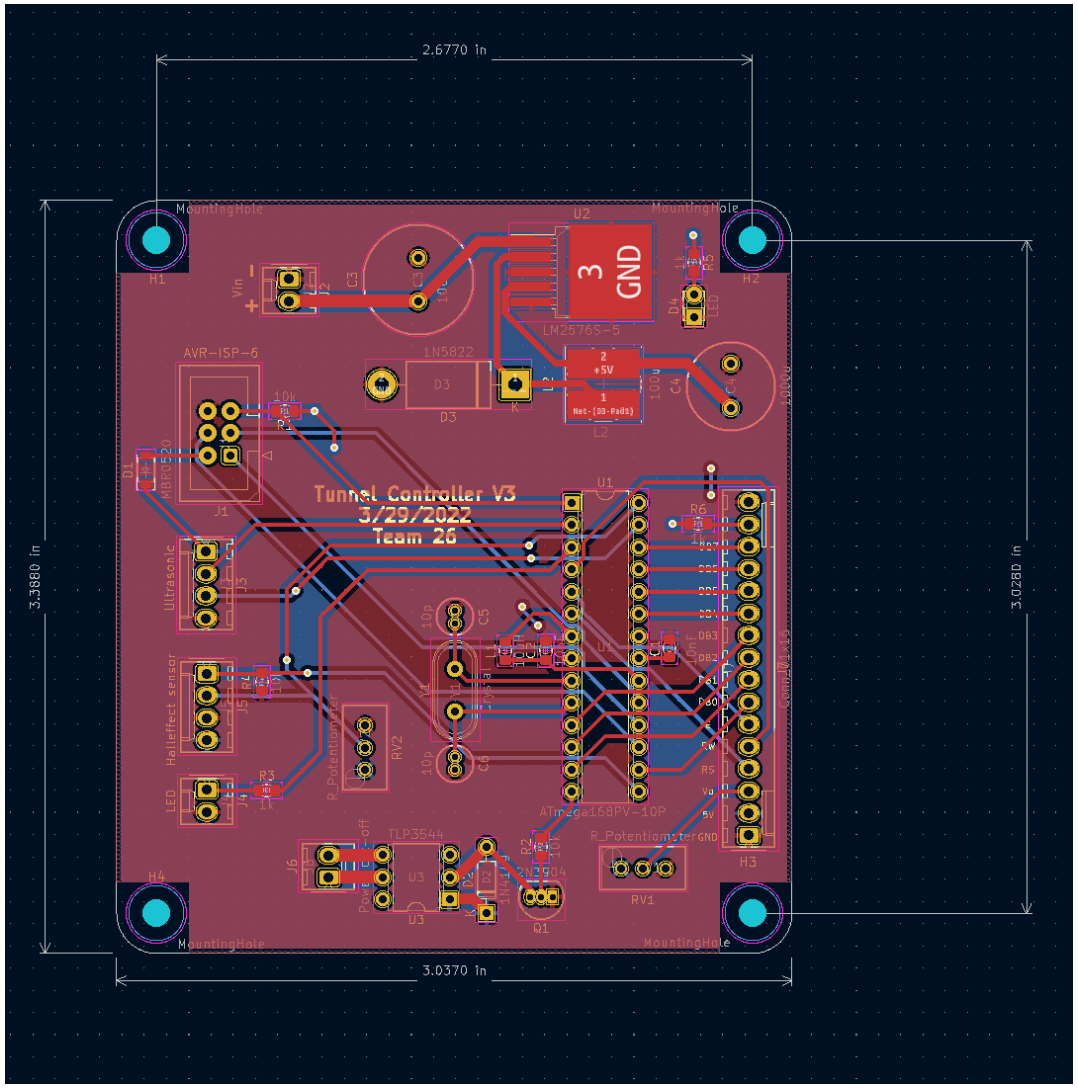

Video Demonstration

Unaddressed Mechanical/Physical challenges for pulling.

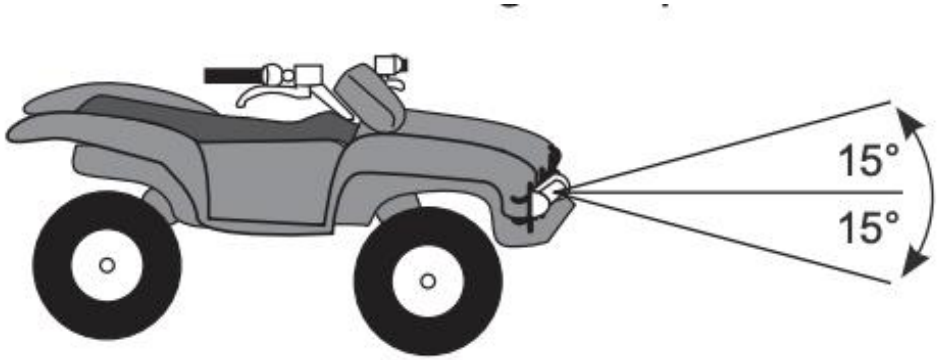

Conclusion

Most environmentally sustainable solution for SSF?

Ropes and Pulleys

Most convenient solution for SSF?

Tractor

- drawback must drive over part of land

Thank You

Questions

The Grainger College of Engineering

UNIVERSITY OF ILLINOIS URBANA-CHAMPAIGN