DESIGN DOCUMENT

EpiCap–A wearable seizure monitoring device

ECE 445 Spring 2022

by

Yuanrui Chen (yuanrui3)

Yichen Wu(yichenw5)

Yiyang Xu (yiyangx6)

TA: Cheng Xu

With help from Kenny Leung

February 22, 2022

1. Introduction:

1.1. Problem:

Epilepsy accounts for 12% of all neurological issues in the United States. Currently, there are not a lot of ways to perform Electroencephalograms (EEG) tests to reveal the pattern of the brain activities. Seizure monitoring is mostly conducted in an inpatient setting or overnight at home with an ambulatory device, which brings inconvenience to both the patients and physicians at different levels.

Appointments are hard to get, work schedule is disturbed, and the inpatient experience is often unpleasant. One of the major issues with ambulatory devices is that it's impossible to monitor a patient's physical symptoms, while it's much easier for staff to record in hospital which helps analyze EEG data. Additionally, they are bulky and ugly so that patients are less likely to carry them around. Thus, we are in need of an EEG-based seizure monitor device that enables faster diagnosing, allows patients to continue daily activities and supports video recording.

Currently, no outpatient epilepsy monitoring device exists that includes a camera module. From our sponsor's interactions with the lead EEG technician at Carle, capturing the patient's arm and leg movements, as well as eye movements are important to correlate with the captured brain waves to determine the type of seizure. For example, if the patient is not moving, but there are some abnormal brain activity, that can be suspecting of an absence seizure, versus for a grand mal seizure, you would see some arm flailing movements. For patients with psychogenic non-epileptic seizures, that is seizures that is psychologic in nature and not an abnormality of the brain, the patient's eyes would normally be closed, compared with seizures where their eyes may be opened, fluttering, or deviating.

Also, no commercially available EEG cap on the market is in the form of a baseball cap that has a vision of being customizable. From our sponsor's interactions with patients, they share

that they would want an EEG device that blends into the surrounding. Current outpatient (i.e. carry outside the hospital) devices look horrendous, and kids can get made fun of.

1.2. Solution:

Since the old kinds of devices are either too bulky or too unpleasant for the patients to wear, it became important for us to create a device that can minimize its influence on the patient's normal activity. For example, given the weight of the old device, adults at work may experience a very heavy load on their neck. Young kids wearing this at school may be considered not cool by other kids, which makes it harder for them to make friends.

To make the device better fitted into daily life, we want to build it on a baseball cap that has minimal effect on patients' daily activities while still tracking their brains all the time to make sure every seizure is detected and measured. We also want to add a small, light-weighted camera at the front of the cap to make video recordings together with the EEG data. Thus when the data is further evaluated, they can pair the data with the patients' facial expressions to see if any facial sign can indicate seizure. Also, we want to further upload the data and video to the cloud, creating a database big enough for the AI to train and learn to help doctors detect seizures.

1.3. Visual Aid:

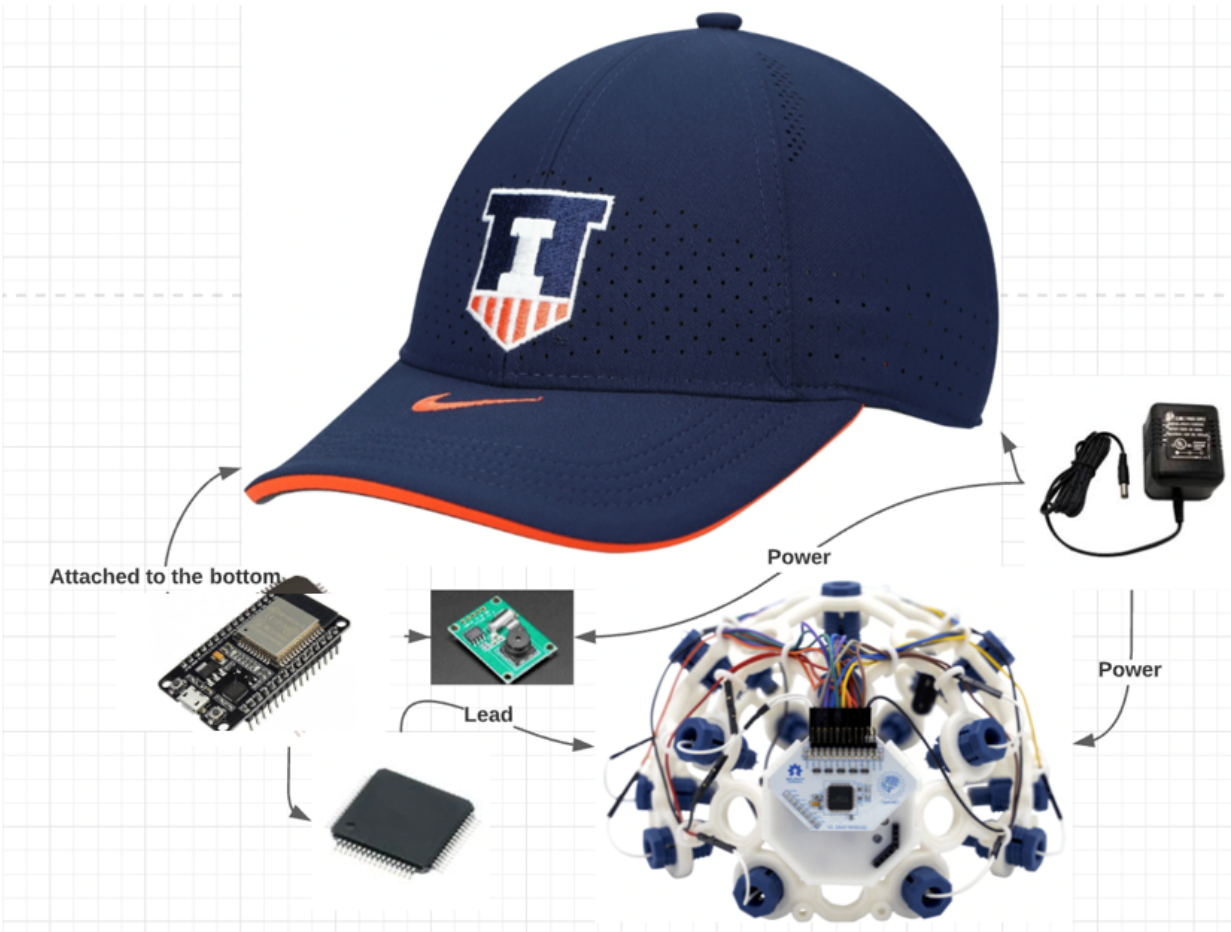

Figure 1. Visual Aid for EpiCap

1.4. High-level requirements:

a. Every component must be integrated onto the cap while not influencing the balance of the cap. During the event of seizure, the whole system should remain stable: the electronic system should keep functioning, and the cap stays on the patient's head. The system should be constructed into an SoC due to the size/weight constraints. It must include SPI bus, SDIO and GPIO to interface with the electrodes, camera, ADC, and flash storage.

b. EEG data shall be recorded at 240 +/- 5% Hz and uploaded continuously to the cloud in real time. The system shall be able to identify possible seizure activities.

c. The EEG cap shall track the patient's eye and arm movement to shoulder height. The video recordings during the event of seizures must be uploaded to the cloud for physicians to review and analyze afterwards.

2. Design:

2.1. Block Diagram

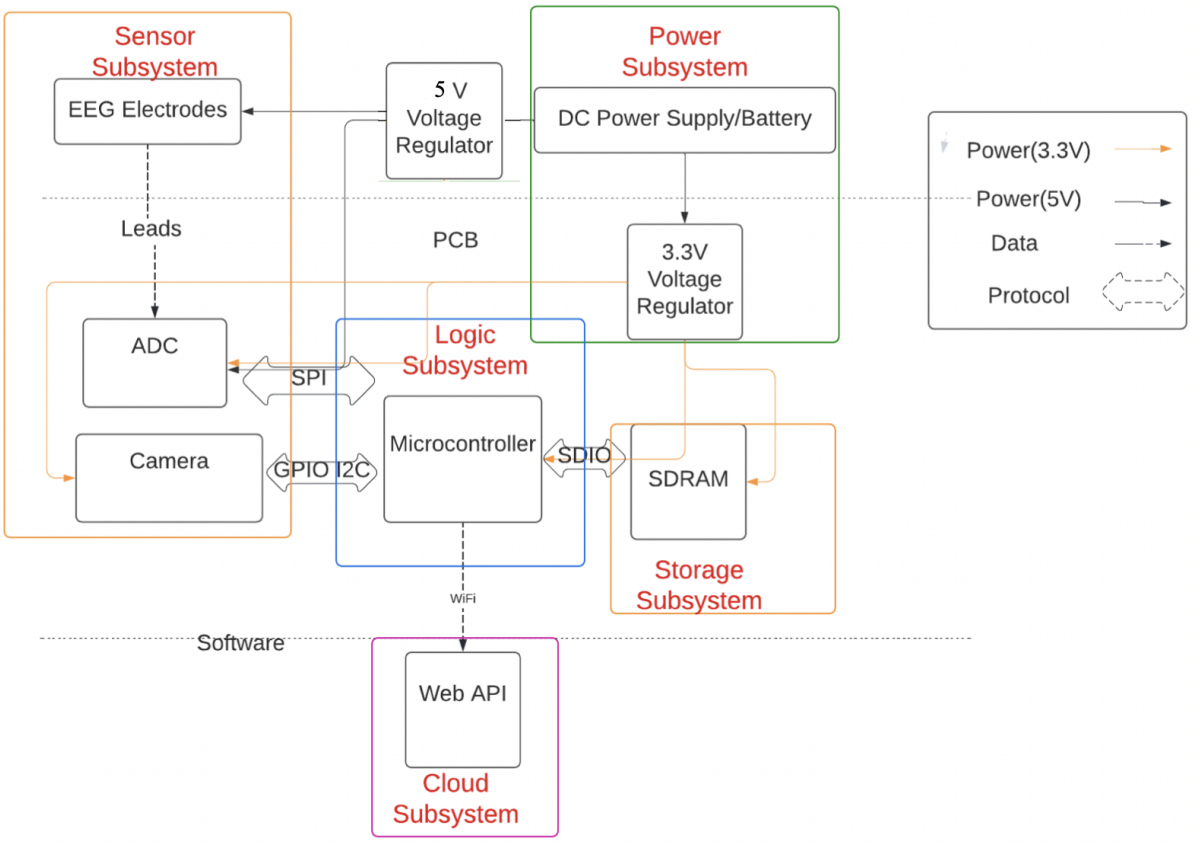

Figure 2. High-Level Block Diagram for EpiCap

2.2. Flow Chart

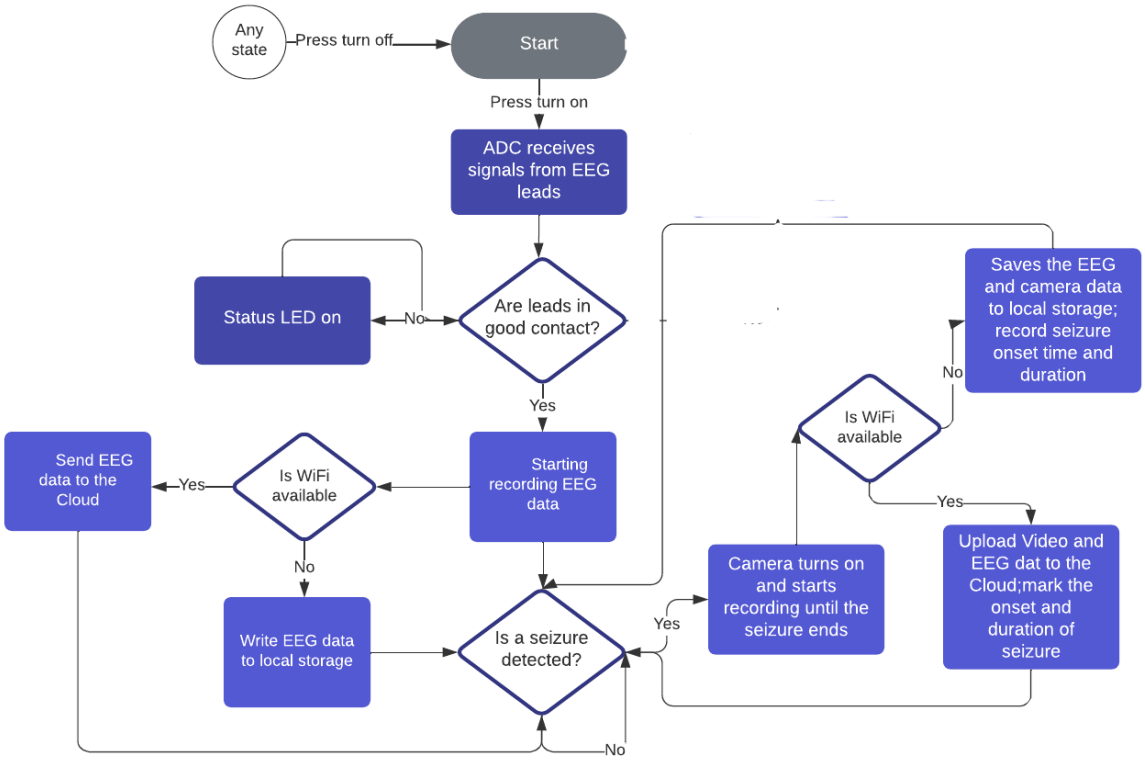

Figure 3: Flow Chart

2.3. Subsystem Overview:

a. Power subsystem:

It's used to power up the entire system. The battery capacity determines the operating period of the system.To be specific, it powers the Logic, Storage, and Cloud Subsystem as well as the camera with a 3.3V linear voltage regulator. It will directly power the electrodes with 5VDC. The ADC (analog to digital converter) will have both 3.3V and 5V to be the analog power supply and digital power supply respectively.

Table 1. RV Table for Power Subsystem

Requirements	Verification
1. It must provide relatively low noise to the system in case of affecting the ADC (analog to digital) functionality.	1. Use an oscilloscope to measure the ripple voltage from input voltage(5V)/LDO output voltage(3.3V) to ground respectively and ensure they are less than 1 μV.
2. The linear voltage regulator should continuously provide 3.3V +/- 0.1V.	2. Use an oscilloscope or a digital multimeter to measure the output voltage of the LDO and ensure it's within 3% of 3.3V.
3. The battery should continuously provide 7.2V +/- 0.1V.	3. Use an oscilloscope or a digital multimeter to measure the output voltage of the battery and ensure it's within 3% of 7.2V.
4. The battery capacity should be large enough (somewhere between 5000mAh to 7500mAh) to support the circuit for at least 24 hours.	4. A. Fully charge the battery. B. Discharge it with the operating voltage. Ensure it can continuously operate for at least 24 hours.
5. The operating temperature of the battery should be within 0 to 30°C.	5. Use an infrared thermometer to measure the temperature during discharging of the battery and ensure it's less than 30°C.

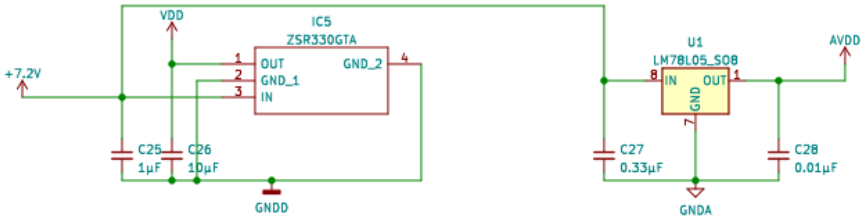

Figure 4: Schematic for Power Subsystem

b. Sensor Subsystem:

This subsystem collects and processes the EEG and video data so that it can be stored into the Cloud and Storage Subsystem. Electrodes, ADC, and camera are integrated into this system. Electrodes are used to collect the EEG data. ADC (ADS1299 chip) is used to collect the analog signals from the electrodes and convert them into digital signals which then can be uploaded to the cloud or stored locally. This system connects to the Logic Subsystem through the SPI peripherals and GPIO so that the ADC and the camera can interface with the microcontroller through SPI peripherals and GPIO respectively.

Table 2. RV Table for Sensor Subsystem

Requirements	**Verification**
1. The ADC should have a sampling frequency of 240Hz+/- 5% to ensure the quality of the EEG data.	1. A. Send stream command to ADS B. Receive the test data to the MCU. C. calculate the sampling frequency by looking at timestamps.

2. Electrodes must remain in contact with the patient's scalp during the seizure and be able to collect the EEG data continuously.	2. A. Have one of the team members wearing the EpiCap. B. Ensure the system is fully and continuously functioning. C. Make some big movements such as running and falling. D. Ensure the electrodes still remain in contact and the system can still receive data.
3. The sampling error for the EEG data should be less than 5%.	3. A. Use a function generator to simulate the brain's electrical signals (analog signal) to one of the electrodes. B. Use Cyton + Daisy Biosensing Board to receive the signal from the electrode and record the EEG data with OpenBCI software. C. Simulate the same signal to EpiCap and compare the EEG data with the result from step B.
4. The size of the camera should be small and the weight should be less than 50g.	4. Weight the camera and ensure it’s less than 50g.
5. The camera must be able to capture the patient’s eye and arm movements during seizure	5. A. Turn on the camera and record for a few minutes. B. Adjust the angle if needed. C. Check the saved video on the SD card to see if it’s capable of capturing eye and arm movements.

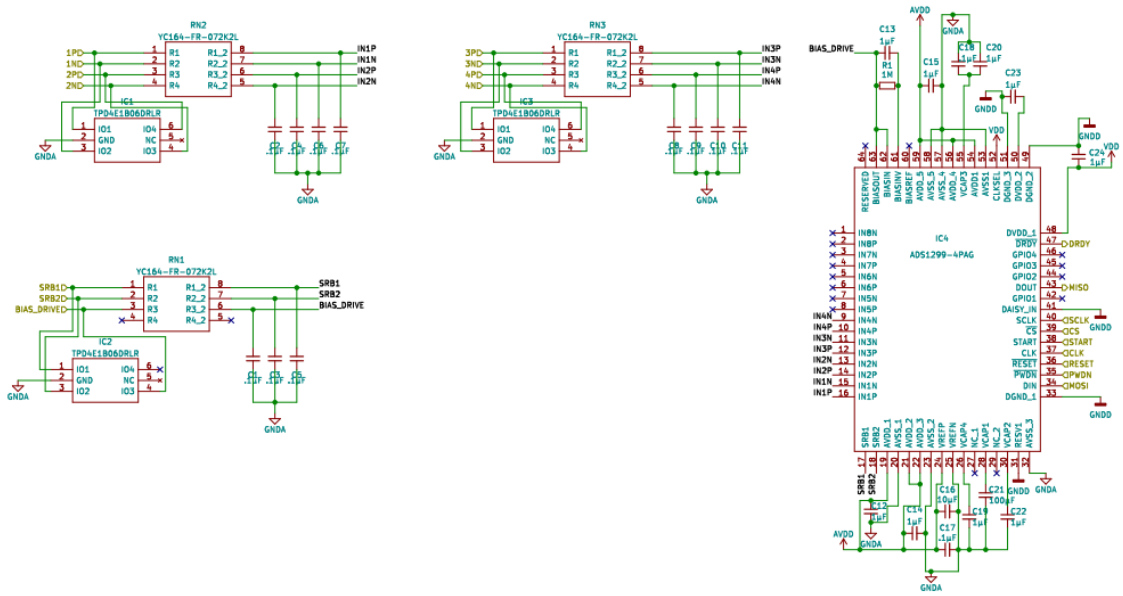

Figure 5: Schematic for ADC

c. Logic Subsystem:

This subsystem contains the logic of the product. It determines whether the patient is experiencing a seizure. This system contains a microcontroller (ESP32) which takes control of receiving data from Sensor Subsystem and storing into the Cloud/local Storage Subsystem. It connects with the local Storage Subsystem using SDIO. The wireless transceiver of the ESP32 ensures the ability to upload the data to the Cloud Storage.

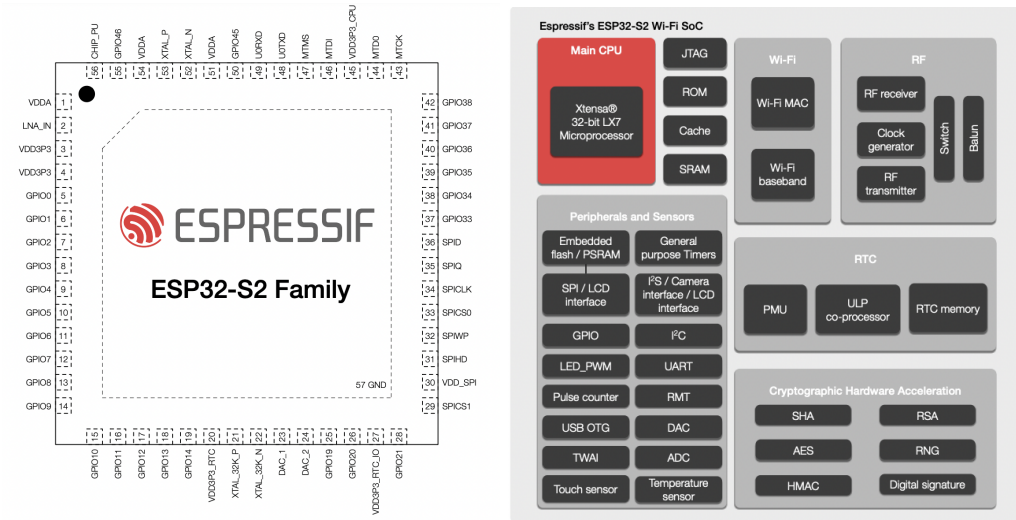

Figure 6: Schematic and Block Diagram of ESP32-S2

Table 3. RV Table for Logic Subsystem

Requirements	Verification
1. The microcontroller must be able to establish duplex communication with the ADC and camera.	1. a. Send "start stream" instruction to ADC via SPI. b. Observe the test data stream and check if the device is functional. c. Provide test signals to the ADC. (Depending on the number of channels we use different number of test signals) d. Probe the pins of MCU and check if the signals are transmitted correctly. e. Use an Arduino programmer to check if signals are received. f. Repeat the above steps for the camera module.
2. The microcontroller must be able to upload data given WiFi connection.	2. a. We first test the wireless functionalities on an ESP32 S2 development board.

	b. As we have confirmed the connection between MCU and ADC, we can connect the ADC to MCU. c. Provide a test signal to the ADC. d. Connect the ESP32 module with a device. e. Confirm that the test signal is transmitted without significant loss.
3. The microcontroller should have enough RAM/cache to process EEG data and camera video data.	3. Compute the data input size and compare it against the RAM/cache given in MCU datasheet.
4. The microcontroller module must be able to determine the WiFi connectivity.	4. a. Test under WiFi coverage. b. Repeat step 2 to see if WiFi is connected. c. Probe the internal signal that monitors WiFi connection to check if it's high. d. Disconnect the WiFi and check the internal signal again to see if it's low.
5. The microcontroller is able to send signals to the camera peripheral.	5. a. Connect the corresponding pins. b. Program the MCU to provide a high input. c. Access the camera data in MCU and check if they are updated.
6. The microcontroller must write to the SD FAT32 filesystem.	6. a. Remove the content of a microSD card with a computer. b. Insert the microSD into the board. c. Partition the FAT16 file system with the firmware. d. Determine if the microSD card has been partitioned.

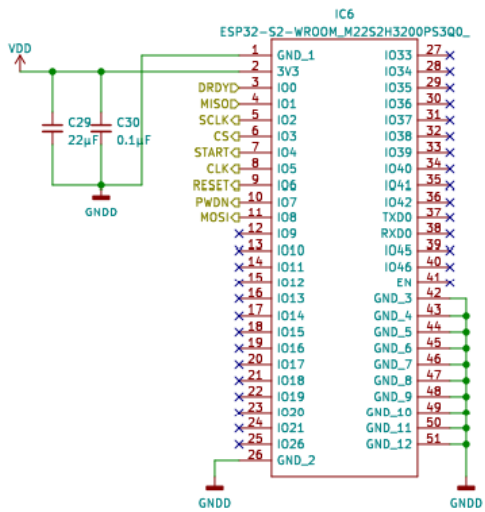

Figure 7: Schematic for microcontroller

d. Storage Subsystem:

This subsystem contains an SDRAM which stores the EEG/video data as a back-up in case of the cloud storage failure.

Assuming the camera has a 10-bit video digital port.

1 hour storage is [(n/8) *3600]/1024 GB, where n is the bit rate of the camera.

[(10/8) *3600]/1024 = 4.39 GB for 1 hour storage capacity.

Table 4. RV Table for Storage Subsystem

Requirements	**Verification**
1. The storage device must be large enough to hold the video and EEG data. (Estimate 1GB).	1. a. Run the device for a period of time to check the amount of data produced. b. Connect to the pc to verify the storage space of the storage device.

2. It should be easy enough for physicians to extract the EEG/video data	2. Connect the output of the system to the pc or mobile phone and check the format of the output to see if it's easily readable by physicians.

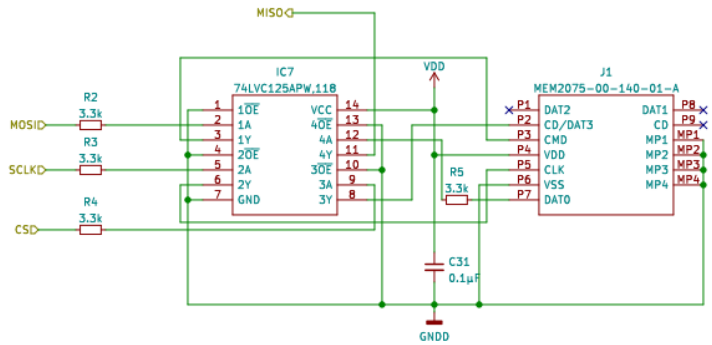

Figure 8: Schematic for storage system

e. Cloud Subsystem:

This subsystem uploads the EEG/video data from the microcontroller to the cloud via a wireless transceiver. It instantly sends out the data so that the physician can directly extract and analyze the data whenever and wherever they need it. The cloud platform is Chart.js. https://codepen.io/jordanwillis/pen/bqaGRR .

Table 5. RV Table for Cloud Subsystem

Requirements	**Verification**
1. The esp32 should be able to connect to WIFI for data uploading.	1. Compile the esp_wifi header file and check the result to see if wifi is correctly set.
2. The platform should update with an interval of 10ms. Data should be visualized.	2. Check the cloud to track and record constant updates.
3. Physicians should have easy access to cloud storage.	3. Open the cloud frequently to make sure it doesn't crash and no bugs appear.

2.4. Tolerance Analysis:

Obtaining accurate EEG signals is essential for the success of this product. We must ensure that dry electrodes can collect EEG data properly in the event of a seizure. Noise in measurements should be minimized. The reference voltage should also reject disturbances. Denoise capacitors will be used in the connection between electrodes and analog digital converters. We chose TI ADS1299 for the task for its high performance in biomedical applications.

Apart from this, we must ensure that camera data can be processed by the microcontroller. This places a high demand on microcontroller cache size.We have two ways of processing the sensor data. One is local storage and the other is instant upload to the cloud. The former is a backup plan for the latter when WiFi connection is unavailable. It's estimated that camera data is 4GB per hour. The size of EEG data is insignificant compared to the size of video data. Our EEG cap should be able to store more than two hours of video data. Thus we will choose a SD card that is larger than 8GB.

Figure 9: Epileptic spike and wave discharges monitored

We also need to make sure the microprocessor is able to detect seizure waveforms with a reliable algorithm. Currently we decide to use the change in average mean of EEG signal amplitude to detect seizure activities. We will sample 4 seconds of EEG data, store it in a buffer and do the following computation:

1. Calculate the mean of the sampled signal.
2. Compute the deviation of each point from the mean in terms of positive distance.
3. Add up all these deviations and compute their average.
4. We use this value as our metric – AD.

We will set a reference value for AD. When the calculated metric is larger. than 1.3AD, we will conclude that a seizure is detected. This algorithm is relatively simple since we want to implement a prototype on our microprocessor which has a limited computing capability. We will improve this algorithm later in this project when other modules are verified and implemented.

We will use the TUEG Temple dataset from the link below to test our algorithm in Python.

https://isip.piconepress.com/projects/tuh_eeg/html/downloads.shtml#c_tueg

3. Cost and Schedule

3.1. Cost Analysis

a. parts

Table 6. Bill of Materials

Component	Quantity	Price($)
ESP32-S2 WROOM Module	2	3.25

with PCB Antenna - 4 MB flash and no PSRAM - 4MB Flash		
356-ESP32-S2DEVKITM1	1	9.18
356-ESP32-S3WROOM1N8	1	6.71
ADS1299-4PAGR	2	39.38
LTC3204EDC-5#TRPBF	2	4.270
DM3BT-DSF-PEJS microSD Card Carriage	2	2.300
SDSDQM-032G-B35 microSDHC card, 32G	2	5.850
Single-cell LiPo battery, 5000 mAh	1	13.390
1568-PRT-15217-ND LiPo Battery Charger	1	9.100
W3A45C102MAT2A 1000pF Capacitor Array	10	0.248
RC1206FR-0710KL 10 kOhm Resistor	10	0.074
TPD4E1B06DCKR TVS Diode	12	0.56
CAY16-2201F4LF 2.2kOhm Resistor Array	10	0.086
RC1206FR-07680RL 680 Ohm Resistor	10	0.074
RC1206FR-07220RL 220 Ohm Resistor	10	0.074
CRT0805-BY-1004ELF 1MOhm Resistor	10	0.179
RC0805JR-0747KL 47 kOhm Resistor	10	0.036
C0805C225K8RAC7210 2.2 uF Capacitor	10	0.162
0805AC101KAT2A 100 pF Capacitor	10	0.54
CC0805BRNPO9BN2R2 2.2 pF Capacitor	10	0.124

C0805X104K1RACAUTO 0.1 uF Capacitor	50	0.2144
C0805C106K8PAC 10 uF Capacitor	10	0.632
C0805X105K5RACAUTO 1 uF Capacitor	30	0.86
PMK212BBJ107MG-T 100 uF Capacitor	10	1.13
C0805X102K5RAC3316 1000 pF Capacitor	10	0.193
ZSR330GTA 3.3V Linear Voltage Regulators	5	1.26
ZSR500GTA 5V Linear Voltage Regulator	5	1.26

b. Labor

We estimate that each team member will spend around 13 hours per week on the project. Based on the market pay for hardware engineers, the labor cost for each member is $40/hour. We will work for 12 weeks. The labor cost estimate is 3*12*13hours*($40/hour) * 2.5=$46800.

c. Total Cost

The total cost would be cost of parts + cost of labor, which is

404.96 + 46800 = 47204.96

3.2. Schedule

week	Yichen Wu	Yuanrui Chen	Yiyang Xu
2/21	design document	design document	design document
2/28	Design review	Design review	Design review

		Buy necessary components for the project.	Design a prototype PCB board.
3/7	Work on esp32 wifi programming	Get the PCB board approved and order first around. Test OpenBCI kit.	Get the PCB board approved and order first around. Build some subsystems.
3/14	Spring Break	Spring Break	Spring Break
3/21	Try to receive data from the hardware. Work on firmware. Complete unit-testing for some subsystems	Complete unit-testing for some subsystems. Test on-board hardware. Submit 2nd round PCB design.	Complete PCB Board by soldering and mounting components. Submit 2nd round PCB design.
3/28	Individual progress report; Software development	Individual progress report Finalize 2nd PCB. Complete all unit tests.	Individual progress report Finalize 2nd PCB. Complete all unit tests.
4/4	Try uploading data to the cloud via wifi.Finish the firmware code for the microcontroller.	Test on-board hardware system and debug it. Work on communication protocols.	Solder the 2nd PCB. Test on-board hardware system and debug it.
4/11	Perform complete system testing. Prepare for Mock Demo.	Perform complete system testing. Prepare for Mock Demo.	Perform complete system testing. Prepare for Mock Demo.
4/18	Mock Demo	Mock Demo	Mock Demo
4/25	Mock Presentation	Mock Presentation	Mock Presentation
5/2	Final Presentation	Final Presentation	Final Presentation

4. Ethics and Safety

There are several concerns regarding our project. The cap confronts several risks and vulnerabilities as a result of the use of batteries, electrodes, cables, chips, storage, camera. Explosion, electric shock and mechanical danger are three dangerous factors in the design. Falling is a common scenario for epilepsy patients. We must also take precautions that our device does not create more danger for a patient in the event of a fall. We are not responsible for the mechanical part of the design, but we will try to integrate most of the electronic components on an integrated board and encase it with soft materials.

We need to ensure that both the battery and board present no hazard to the patient, especially in the event of high heat, moisture, and any sort of mechanical perturbation. Chemical leak and harmful electromagnetic radiation should be taken seriously.
When uploading the data and video to the cloud, we have to make sure that they are confidential and only the specific doctor can have access to it. The camera attached should not be deployed for any other purpose other than monitoring the patient's eye movements. The access to the camera data should be strictly obliged to medical ethics code. We can design a password system for the web API and the local storage so that the confidentiality of the information is preserved.

The design and testing of this product will comply with the IEEE ethics code. We will not use OpenBCI resources without proper citation. We will also consult doctors on the safety aspect of the final deliverable.

References

[1] “ADS1299,” *ADS1299 data sheet, product information and support | TI.com*. [Online]. Available: https://www.ti.com/product/ADS1299#:~:text=ADS1299%20ACTIVE&text=The%2n.d.S1299%2D4%2C%20ADS1299%2D,reference%2C%20and%20an%20onboard%20oscillator.

[2] "ESP32 S2" [Online]. Available:

https://www.espressif.com/sites/default/files/documentation/esp32-s2_datasheet_en.pdf

[3] “Setting up for ECG,” *OpenBCI Documentation*, 27-Jul-2021. [Online]. Available: https://docs.openbci.com/GettingStarted/Biosensing-Setups/ECGSetup/.

[4] Figure 6: Uploaded from the German Wikipedia, uploaded into the German Wikipedia by Der Lange 11/6/2005, created by himself.

[5] Team 9: EpiCap ECE 445 Shiru Shong, Casey Bryniarski, Qihang Zhao, Design Document, Final Paper. (They worked on the same project last semester)

[6] ECE445 RFA by Yuanrui Chen, Yiyang Xu and Yichen Wu

[7] Email correspondence with Kenny Leung from Carle College of Medicine

[8] IEEE, “IEEE code of ethics,”. [Online]. Available: https://www.ieee.org/about/corporate/governance/p7-8.html.