REMOTE CONTROL LED WITH TIME/TEMPERATURE/DATE DISPLAYING LCD SCREEN AND TOUCH SENSOR

By
Jingfan Zhang
Jintao Chen
Yuming Jin

Design Document for ECE 445, Senior Design, Fall 2019
TA: Mengze Sha

03 Oct 2019
Team No. 30

Table of Contents

1. Introduction

While most of the LEDs that we commonly used are being controlled by a single wired switch, sometimes when we are right about to fall asleep in our cozy bed, especially in the winter, we find it so tormenting to get up, reach the switches, and turn off the LEDs. A friendly designed wireless bedside system that controls all the LEDs around the house would avoid such cases.

1.1 Objective

Since some people might prefer other bedside functionalities as well, we propose to create a multi-functional user-friendly remote control LED system that has some designed features including:

1. LCD screen that displays the current time, room temperature and room humidity to the user.
2. Functioning alarm clock which rings at user's predefined time.
3. Capacitive touch switches that turn the LEDs on and off.
4. LEDs brightness level controlling through power MOSFETs.

1.2 Background

Although some companies(Siemens[1], etc.) have been developing bedside displays(usually in the form of a digital clock plus radio/temperature), our design is significantly different from most of the existing designs, in a way that our system are targeted to switch the LED strips around the house and adjust their brightness. We are confident that if we can produce such bedside system with affordable parts, it will be a marketable product as one of the most multifunctional bedside systems.

1.3 High-level Requirements List

1. Data through bluetooth or FM should be effectively transmitted and received by the two ATmega328P - 8-bit AVR Microcontrollers on both the transmitter side and the receiver side.

2. The product should be able to remotely turn the LEDs on and off from a distance and the bedside and wallside controllers are connected by Bluetooth. And the brightness control circuit needs to have some sort of memory so whenever the user turn on the LEDs, the previous brightness level should be restored without further actions.

3. The LCD screen of the bedside controller should display time, humidity, and temperature in the right format. Same information should be transmitted to the wall side controller and displayed in a similar format. User should be able to turn the LEDs on and off through the capacitive switch without touching it.

2. Design

2.1 Block Diagram

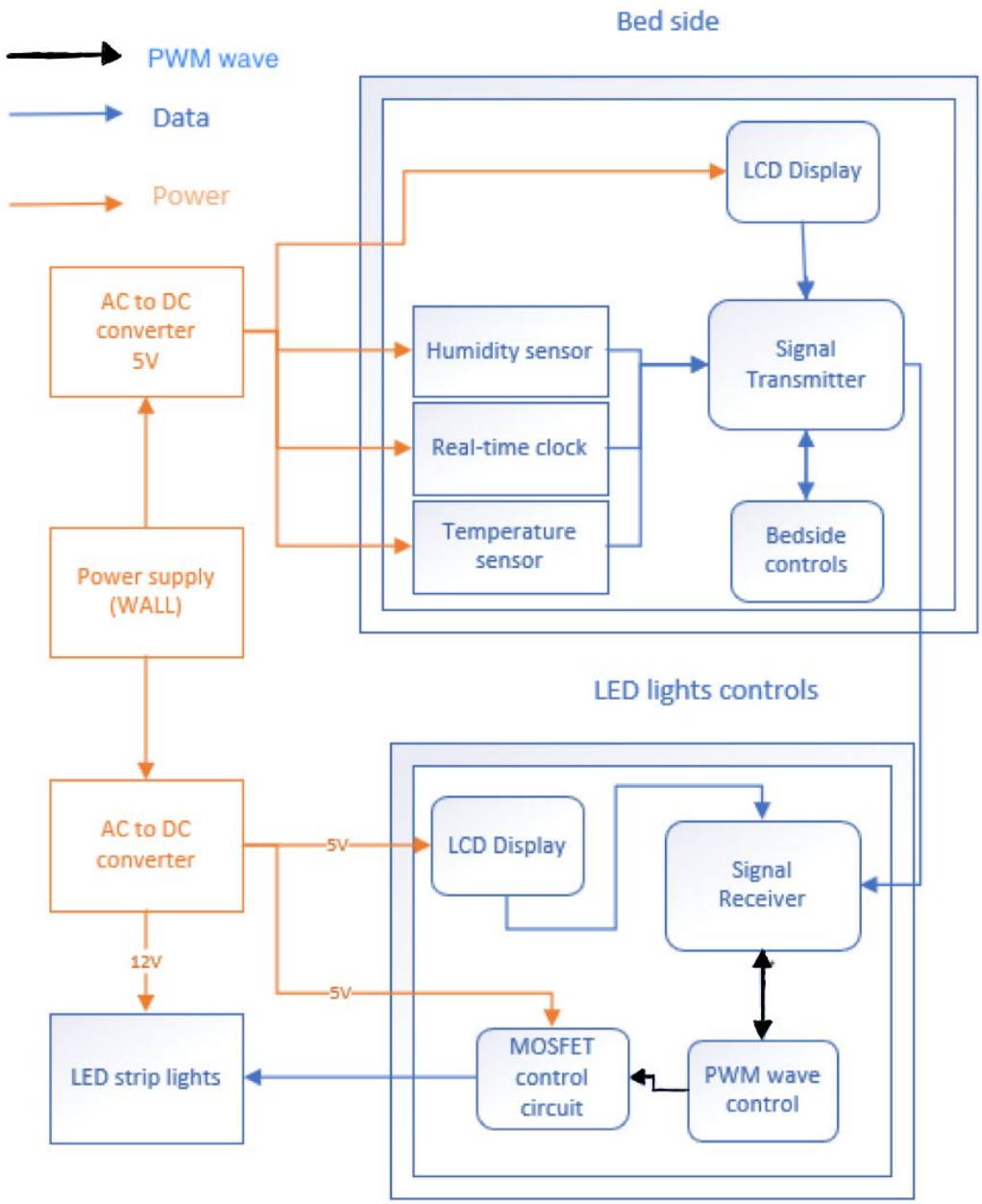

Figure 1 Block Diagram

2.2 Physical Design

We split our designs into two parts, the bedside and the wallside.

All the three sensors and capacitive switch are located on the bedside. Those sensors give us feedback on room humidity, room temperature and local time, along with the capacitive touch switch which gives us information on whether the LEDs are on or off. If the user turn the capacitive touch switch on, then the arduino on the bedside will send a turn-on message to the arduino on the wallside, which, after receiving the signal, gives commands to PWM wave control and further controls the MOSFET block for LEDs brightness. Finally, the MOSFET control unit along with coding in ATmega328P decides the brightness level which LEDs will be turned into.

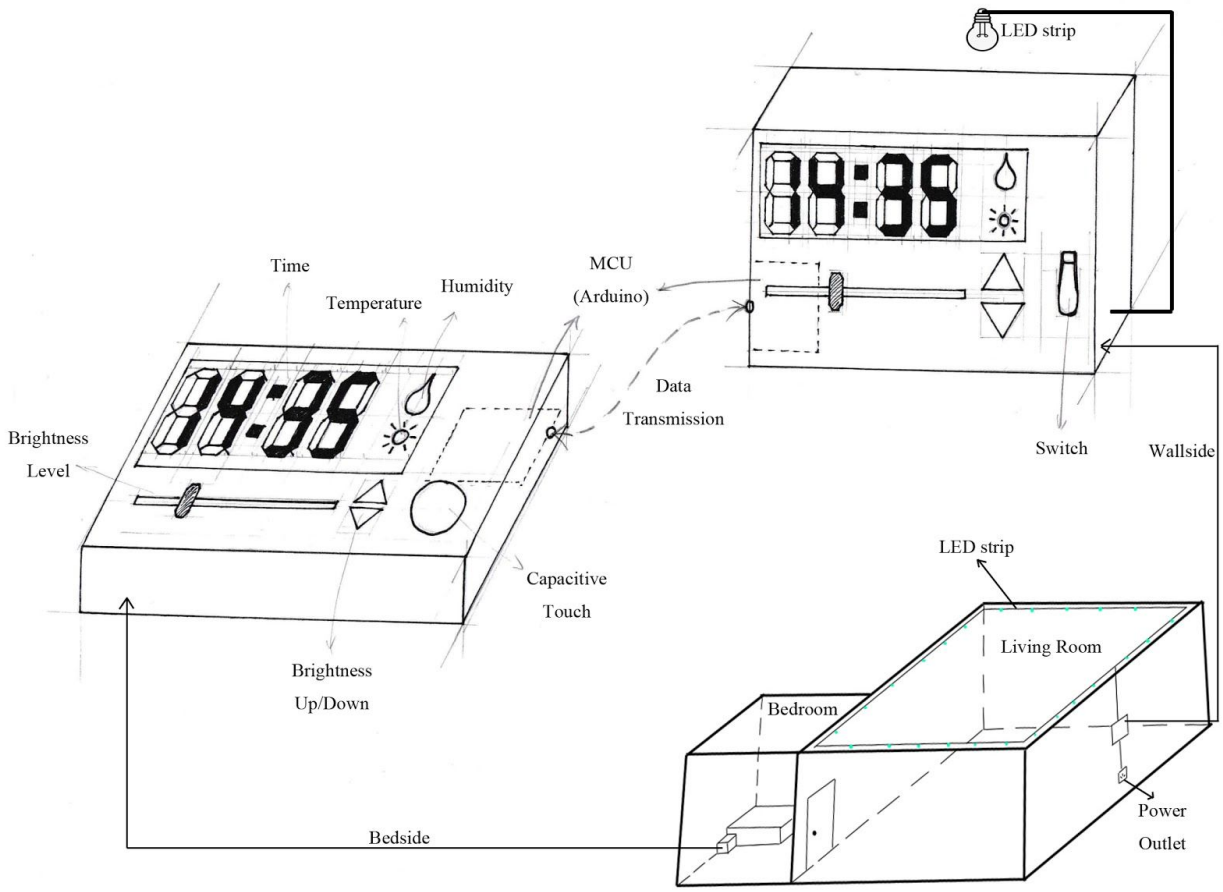

Figure 2 Physical Design Sketch

2.3 Subsystems

2.3.1 Power Subsystem

2.3.1.1 AC to DC Converter

A standard AC to DC converter to transfer AC circuit provided at houses to DC circuit needed for LED circuit.

Requirement	Verification
Outputs DC source with 3A current and 12V voltage.	1. Measure output voltage and current using multimeter or G-meter and ensure they are within range. 2. Apply the voltage supply to some electronic devices needing 12V voltage supply and see if the device is functioning well.

2.3.1.2 Current Regulator

A current regulator that ensures the circuit current does not go too high and cause some potential danger.

Requirement	Verification
Limits current to be lower than 10A.	1. Measure current using multimeter and make sure current does not go over 10A in all cases.

2.3.2 Sensor Subsystem

2.3.2.1 HDC2010 Humidity & Temperature Digital Sensor

A humidity & temperature sensor that gives out in-room humidity information to be put in two LCD screens.

Requirement	Verification
1. Functional under normal indoor humidity level (30% to 50%) 2. Humidity accuracy within ±5% 3. Functional under 3.3V supply voltage	1. Relative humidity range from datasheet is 0% to 100%. Measure indoor humidity and ensure the range we required is covered. 2. Humidity accuracy from datasheet is ±2% 3. Supply voltage from datasheet is 1.62V to 3.6V. Connect with an actual 3.3V voltage supply and check the readings.

2.3.2.2 LM35 Temperature Sensor

A temperature sensor that shows real time temperature to be put in two LCD screens.

Requirement	Verification
1. Functional under normal indoor temperature level (20°C to 25°C) 2. Temperature accuracy within 1°C 3. Functional under 5V supply voltage	1. Operating temperature range from -55°C to 150°C. We will ensure that the room temperature can be measured correctly. 2. Ensured accuracy from datasheet is ±0.5°C at 25°C. Attach the ISC-40180 to a 5V voltage supply, and an oscilloscope to the output. 3. Supply voltage from datasheet is 4V to 30V. Connect with an actual 5V voltage supply and check the readings.

2.3.2.3 DS3231 Real-time Clock

A real-time clock that gives very accurate time information to be indicated in two LCD screens.

Requirement	Verification
1. Outputs accuracy ±2ppm from 0°C to +40°C; Accuracy ±3.5ppm from -40°C to +85°C	1. Connect the DS3231 to a voltage supply, and the output to a DMM. 2. Test for 60 seconds to ensure

2. Operates under 3.3V DC voltage supply that can be provided using 3.3V 1A ac to dc adaptor, 5.5/2.2 mm. The range is from 2.3V minimum to 5.5V maximum, so the 5V voltage supply would not go over the tolerance maximum value.	voltage safe at 3.3VDC and 5VDC to not blow the DS3231 pins. 3. If the clock functions well, it should output correct year, date, hour, seconds and also the functioning voltage and current do not go too high.

2.3.2.4 TTP223B Capacitive Touch

A capacitive touch which decides whether or not to turn on the LED. This is the most important sensor in all these four sensors.

Requirement	**Verification**
1. Required operating voltage from 2.0V~5.5V. Operating current at 3V, no load is 3.0uA. At low power mode current is typically 1.5uA. 2. Working temperature from -40°C~+85°C	1. Connect the capacitive touch to 3.3V DC voltage supply and measure its current using an oscilloscope to ensure that the touch is functioning.

2.3.3 Central Control Subsystem

2.3.3.1 Main Control Units

We use two arduinos, or ATMega328P micro-processor chips for data and command position and orientation. Since ATMega328P chips are central units for Arduino, we should be able to write code to decide their behaviors just as we did in other classes involving the use of arduino.

Requirement	**Verification**
1. Bluetooth transmission speed up to 25Mbps 2. Required power from 0.5mW to 100 mW.	1. Transmit data between chips and record the time taken. 2. Test using existing power supply: connect the microprocessor chips to 5V power supply when fully functioning and measure operating power using oscilloscope.

2.3.3.2 Brightness Control

To prevent unnecessary eye strain, it is important for the user to be able to decrease/increase the brightness of the LED strip to different levels and match the surrounding workspace brightness. For brightness control we plan to use L7805CV electronic parts distributor along with two IRF540p power MOSFET and a BD139 NPN bipolar- junction transistor, two 100 kΩ resistors, four 10 kΩ resistors, one 500 ohm resistor, two 0.1 uF capacitor and 5V, 12V voltage supply. The detailed circuits is shown in Figure 3.

Requirement	**Verification**
1. Required 2 different DC voltage supplies to power the circuits. One is 12V,3A and the other one is 5V,1.5A. 2. 12 different Level of brightness is provided and controllable 3. Brightness level storage is working well so that the next time we turn the LED strips on they would be in the same brightness level as they used to be when we turned them off before.	1. Connect an oscilloscope to the output pin 11 of the L7805CV. Start from the lowest brightness level and increase step by step. The output PWM frequencies and duty cycles should match the preset values in the code. 2. Turn on the LEDs, change the brightness level then turn them off. They should be at the same brightness level when we turn them on again.

2.4 Functional Overview

2.4.1 Remote control

this function is essential in our design. Currently we plan to use bluetooth for wireless connection between bedside and LED side. Possible replacement includes antenna to transmit signal, but because of the various antenna design considerations it's not our best choice. Such replacement would definitely add difficulty to our design. This corresponds to the first point, "remote control" of our high-level requirement.

2.4.2 LCD display

Accurate time, temperature and humidity captured by the corresponding sensors should show up on the LCD displays in a favorable way. This is mentioned in the third point "LCD display with features" of our high-level requirement.

2.4.3 Capacitive touch

The capacitive touch should allow the users to turn on and turn off remote-controlled LED strips without directly touching the switch. This is one of the features mentioned in the third point "LCD display with features" of our high-level requirements.

2.4.4 Brightness control

As we know, in the daytime we do not want strong light while at night we want our LEDs to be brighter. Such design of twelve adjustable brightness levels makes our design user-friendly. This is mentioned and discussed in the second point of our high-level requirements.

2.4.5 Brightness storage

Everytime we turn on our LED strips, they would remain in the same brightness level as they used to be in the last time when we turned it off. With this functionality, users do not need to press the brightness adjustment knob several times to adjust the LED to their favorable brightness level.

2.5 Supporting Material

2.5.1 Brightness Control Circuits

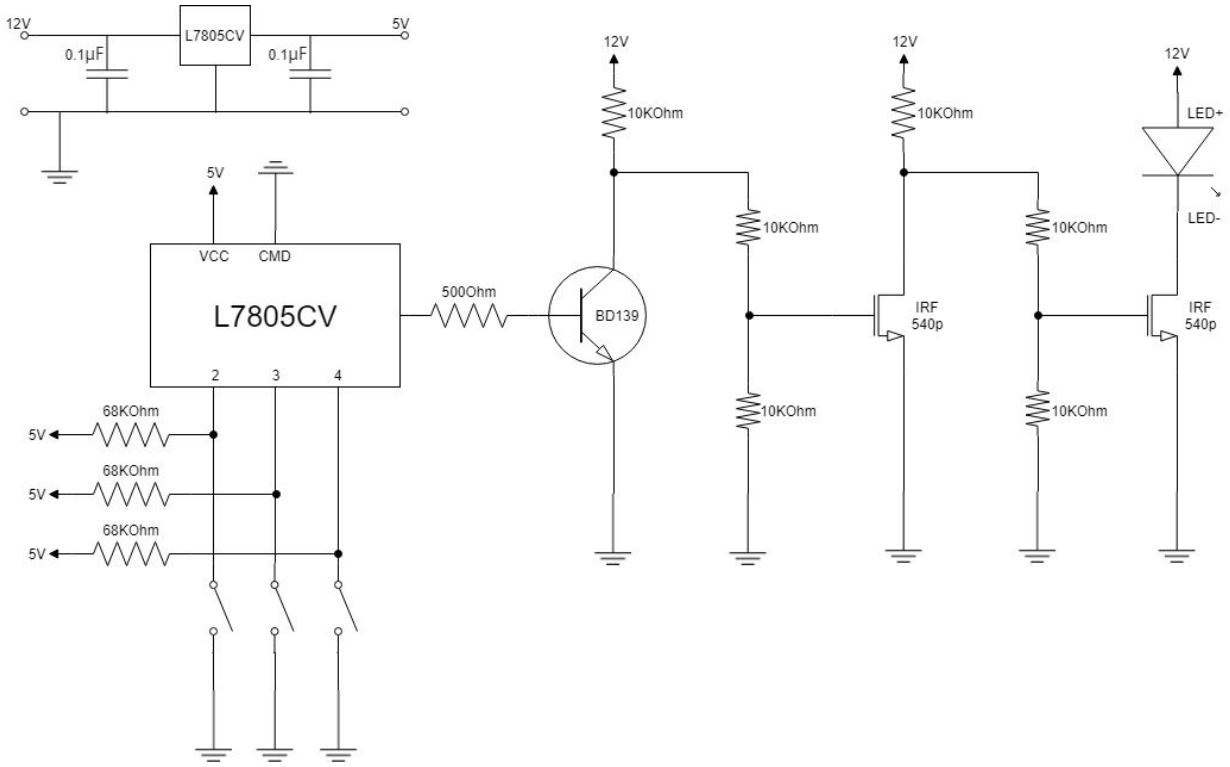

Figure 3 Brightness Control Circuits

The L7805CV chip that we use is an electronics parts distributor. The top left diagram shows how the L7805CV chip is powered. Capacitive switch connected with pin 2 which controls the on/off of the LED strip. Switch connected with pin 3 will increase the brightness level while switch connected with pin 4 will decrease the brightness level. Pin 11 is the output pin which can output 12 different PWM frequencies and duty cycles corresponding to 12 different brightness levels. The brightness level will no longer increase at its maximum and will no longer decrease at its minimum. We will also have some storage unit connected with the circuit that can store the previous brightness level set by the user. So later on when the user turn the LED strip on, the previous brightness level will be restored.

2.6 Tolerance Analysis

2.6.1 LM35 Temperature Sensor Tolerance[2]

- Supply voltage from -0.2V to 35V maximum.
- Output voltage from -1V to 6V maximum.
- Output current to 10mA maximum.
- Junction temperature from -55°C to 150°C maximum.
- Temperature tolerance range: 2°C to 150°C
- Maximum possible power P= VI = 6V * 10mA = 0.6W << 10W, acceptable power.

2.6.2 DS3231 Real-time Clock Extremely Accurate I²C-Integrated RTC/TCXO/Crystal Tolerance[3]

- Input voltage from 2.3V minimum to 5.5V maximum. 3.3V is preferred.
- For 5.5V maximum voltage supply, current cannot go over 150uA.
- For 3.63V medium (preferred) voltage supply, current cannot go over 70 uA.
- These are all allowed current limits of our circuit.
- Power switch Minimum fall time of 300us, which is acceptable for the circuit.
- Power switch rise time can be as small as 0us which is good. Recovery time at power up is typically 250ms and can go up to 300ms.
- Set Vdd is 3.3V which is exactly among our favorable voltage supply values.
- At high voltage, Input voltage should not go below 0.7Vdd; at low voltage, input voltage should not go below 0.3Vdd. These requirements are perfectly good because the provided 3.3V voltage will work well for the chip.
- Maximum power P = VI = 5.5V * 150 uA = 0.825 mW, very small power, acceptable.

2.6.3 HDC2010 Low-Power Humidity & Temperature Digital Sensors Tolerance[8]

- Vdd is ranged from -0.3V t0 3.9V, which fits well into our circuit because we do save space for 3.3V DC voltage supply.
- Supply current cannot go over the limit of 730uA, which fits into our circuit requirement.
- Maximum power P= VI = 3.9V * 730uA = 2.847mW <<1W, very small power and is therefore acceptable.

2.6.4 TTP223 Capacitive Touch Tolerance[4]

- Operating voltage from 2.0V to 5.5V, functioning well with our 5V DC voltage supply.

- At low power mode, operating current is typically 1.5uA and can go up to 3.0uA, maximum; at fast mode operating current is typically 3.5uA and can go up to 7.0uA.These are all very small currents and are therefore good.
- Maximum Power P= VI = 5.5V * 3.5uA = 0.01925 mW << 1W, very small power and is therefore acceptable.
- Operating temperature range from -20°C to +70°C, in which room temperature is perfectly included.

2.6.5 Tolerance Summary

In general, all our chosen chips are working within our wanted voltage, current and power range, which means that we have chosen proper chips to build our circuit.
The most challenging one from all these mentioned tolerance criterion is about the LM35 temperature sensor. It's maximum possible power can go up to 0.6W because its current can go up to 10mA maximum. This might cause some problems so we do need some current regulators to limit the maximum allowed current in the circuit.

3 Cost and Schedule

3.1 Cost Analysis

3.1.1 Labor cost

We chose average salary of $40 an hour for an ECE graduate from University of illinois. For ECE445 we estimated around 12 hours/week for 16 weeks this semester.
(40$/hour) x (12 hours/week * 16 weeks) * 3 people = $23,040.

3.1.2 Parts cost

Parts	Price ($)
3 ATMEGA328-AU	3 x 1.83 = 5.49
2 LM35 Temperature sensor	2 x 0.44 = 0.88
2 DM3231S#-ND Integrated circuits	2 x 8.63 = 17.26
10 TTP223 Capacitive touch sensor	0.9
2 L7805CV electronic parts distributor	2 x 0.5 = 1
2 LED strips	2 x 25 = 50
4 HDC2010YPAR Humidity sensor with temperature sensor	4 x 0.99 = 3.96
1 3.3V 1A AC adapter to DC power adapter, 5.5/2.1mm	5.80
1 5.5V 2A AC to DC power adaptor, 10W for LED strip lights	6.99
1 12V 2A power adaptor AC to DC 2.1mm x 5.5mm plug	7.99
1 6-foot Power strip with 6-outlet surge protector	9.98
2 Mega2560 20x4 LCD display module with screen panel expansion board white on blue, 4 pin jump cables	2 x 12.39 = 14.78
2 Voltage regulators	2 x 0.44 = 0.88
2 Bluetooth module V4.2	5.99 x 2 = 11.98
Total Price	137.89

3.2 Schedule

	Jingfan Zhang	Jintao Chen	Yuming Jin
Week 6	Design Document	Design Document	Design Document
Week 7	LTspice Simulation	Parts Ordering	PCB Drawing and Contact with ECE Workshop
Week 8	First try on Chip Verifying	First try on Parts Testing	Eagle Schematics design for PCBs
Week 9	Breadboard Testing on Lab Bench	Breadboard & Some Electronic Parts Testing	Microprocessor Coding
Week 10	First Assembly on Bedside Controls	First Assembly on Wallside Controls	Brightness Control Coding
Week 11	Overall Testing	Problematic Parts Testing	Code Testing
Week 12	Bedside Control Debugging	Wallside Controls Fixing	Code Fixing
Week 13	Mock Demo Presentation Preparation and Debugging	Mock Demo PCB Parts	Further Code Fixing based on Mock Demo
Week 14	Fall Break	Fall Break	Fall Break
Week 15	Final PCB Testing	Final Demo Simulation	Final Report Writing
Week 16	Final Presentation Preparation	Essay Writing and Final Presentation Preparation	Essay Writing

4 Discussion of Ethics and Safety

Every part of our circuits are crucial to a successful completion of our project. One of the most important parts is the ATMega328P chips, which are the central control units for all other control circuits. They share the information given from four sensors and display them on separate LCD screens. They also generate the PWM wave control signal for LED brightness control. In order to protect the chips from potential short circuits, we need to place enough fuses that cover every circuit. Whenever the current reach a dangerous level, the fuses will protect the chips from potential burn-ups.

Since we will be testing around with the LEDs and different sensors, we need to make sure that the voltages supplied to each part meet their safety standards. High voltage might lead to some potential burn-ups, while low voltage might stop the parts from functioning. To solve such issues, we need a voltage regulator for the power supply to different parts in case of sudden rise of voltage. So every power provided to the electronic parts are safe and manageable.

When soldering, always remember to solder + and - sides of LED strip to + and - ends of power supply correctly, else ATMEga328P chip on the receiver side might be burned.

We will also take the IEEE Code of Ethics[7] as our basic code of ethics. Specifically, our product should not be used as a part for a weapon, or as a platform to perform illegal surveillance (IEEE code 9). In order to avoid bluejacking, we will make our bluetooth connection private (only available to registered controllers). We will also keep our parts and codes private from the public, so that only authorized people (team members and instructors) have access to them. We will not upload our code to any open-source platform before our product is finalized and is requested be shared. During the process of development, all the parts should be kept in dry and safe place, and should be handled with care to avoid hazardous conditions (IEEE code 1). We will always be honest and realistic to the instructors and to ourselves during the project. We will supervise each other and report any suspicious behaviour to the instructors (IEEE code 3). All team members will treat each other fairly and contribute to the project in one’s best effort (IEEE code 8).

5 Citations

[1] Siemens Digital Alarm Clock with Thermometer, Online, url:https://support.industry.siemens.com/cs/attachments/61600566/197835a_201207161405130338.pdf
[2] LM35 ±0.5°C Temperature Sensor with Analog Output and 30V Capability, Online, url:http://www.ti.com/lit/gpn/lm35
[3] DS3231 Extremely Accurate I²C-Integrated RTC/TCXO/Crystal, Online, url:https://datasheets.maximintegrated.com/en/ds/DS3231.pdf
[4] TTP223 Capacitive Touch Switch Circuit, Online, url:https://cdn.solarbotics.com/products/datasheets/ttp223.pdf
[5] ATmega328P - 8-bit AVR Microcontrollers, Online, url:https://www.microchip.com/wwwproducts/en/ATmega328p
[6] L7805CV STMicroelectronics, Online, url:https://www.digikey.com/product-detail/en/stmicroelectronics/L7805CV/497-1443-5-ND/585964
[7] IEEE Policies, Section 7 - Professional Activities (Part A - IEEE Policies) - 7.8 IEEE Code of Ethics, Online, url:https://www.ieee.org/about/corporate/governance/p7-8.html
[8] HDC2010 Low-Power Humidity and Temperature Digital Sensors Datasheet, Online, url:http://www.ti.com/lit/ds/symlink/hdc2010.pdf?HQS=TI-null-null-mousermode-df-pf-null-wwe&DCM=yes&ref_url=https%3A%2F%2Fwww.mouser.com%2F