Phased Speaker Array : Phase of Our Lives

ECE 445 - Senior Design

FINAL REPORT

May 2, 2019

Dave Simley (simley2) and Rosemary Montgomery (rjmontg2)
Team 68
TA: Kyle Michal

University of Illinois at Urbana Champaign

Department of Electrical and Computer Engineering

Abstract

A collinear array of speakers creates overlapping signals with the peak intensity of sound extending out directly from the center of the array. By applying a linear time delay across the speaker array, we can steer this line of peak intensity away from the center at an angle.[1] With the help of IR tracking cameras, we can locate where a person is in a room and delay each signal so that the line of peak intensity is directed towards our listener.

Our project is a collinear array of speakers that allows a user listening to music to walk around a room and experience little to no phase cancellation, due to the signal being steered in their direction. Our implementation was successful, as we were able to delay the four signals so that the sound was actively being steered towards a moving listener. The effect of the phase correction is noticeable when playing a single tone.

Contents

1 Introduction

1.1 Objective

Music can really brighten the mood and complement the atmosphere. What some may not realize, however, is that interference patterns greatly affect the quality of the sound. Say someone has a stereo in their living room, but likes to listen to music while preparing food in the kitchen. If this person isn't equidistant from two speakers, the extra distance delays one of the signals. This delay leads to destructive phase relationships, which can cause the listener to hear music that sounds tinny and lacks warmth.

Our solution is a four speaker array which can “steer” the sound towards a single direction. Our design uses IR sensing cameras to detect where the listener is in the room and applies a linear time delay across the speakers such that the angle of the line of peak intensity runs through the listener.

This device would be useful for audio enthusiasts who admire superior sound quality. While rooms can be acoustically calibrated, nothing on the market exists that actively tracks a person's position and adjusts the sound accordingly. In addition, our project holds great educational merit, as it provides a platform where one can model and physically experience the effects of wave interference.

The rest of this section will provide a general overview into the inner workings of our project. In Section 2, we will outline each module of this design, including descriptions, justifications, and design alternatives. In Section 3, we will go over the verification process that we used to interface each module. In Section 4, we will discuss the labor and parts costs of this project and the time table leading up to its completion. Finally, we will summarize our conclusions and report our accomplishments, uncertainties, and ideas for future work. We will also discuss the ethical considerations that concern our product.

1.2 Design Overview

Our design has several modules including: the signal input module, the control module, the speaker array module, the power module, and the IR cameras. The control module takes an audio signal in from the signal input module, and sends a delayed signal through the four DACs. These signals are then played through the four collinear speakers in the speaker array.

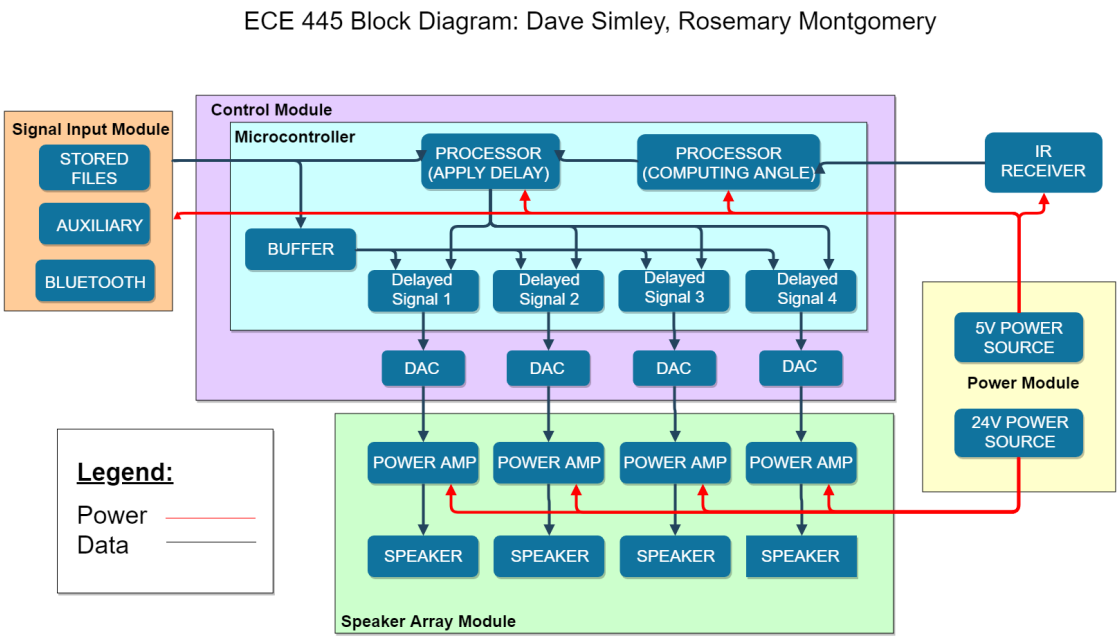

Figure 1: Block Diagram

Module Descriptions

1. **Signal Input Module:** An analog signal is sent in via an auxiliary cable. After filtering, the ADC converts the input analog signal into digital values, which are sent to the microcontroller

2. **IR Receiver Module:** IR sensing cameras detect an IR source in the room and sends the source's location to the microcontroller using I^2C

3. **Control Module:** In this module,

   (a) An ATmega328 microcontroller uses the location information from the IR Receiver to calculate the appropriate delays for the four speakers. The MCU applies these delays and then sends the signals to their respective DAC.

   (b) The DACs then convert the digital values back to an analog signal upon the direction of a timer interrupt by the microcontroller.

4. **Speaker Array Module:** In this module, four power amplifiers are used to amplify the signals so that they can power the speakers, which project the signals into audible sound.

5. **Power Module:** This module supplies power to each of the modules mentioned. The power supply provides +/-12V and 5V.

1.3 Functionality

In order to test the functionality of our design, we will look at the root-mean-square error (RMSE) of the time delays between signals to quantify the quality of phase accordance (compared to an average, ideal time delay). When steering is implemented at 30° from center, phase accordance between signals will result in a 75% lower RMS error. The volume of sound at the user's location must be >=3dB when compared to a single speaker for frequencies of 440Hz, 1kHz, and 5kHz. The direction of the improved sound quality should be updated at least every two minutes so that the user could reasonably move about the room with the improved sound quality following the user.

2 Design

- **Physical Design:** The enclosure consists of an array of four speakers with an IR sensing camera in the center, above the array. The front panel has dimensions of 12"x38", and the speakers are placed 23.3cm (approximately 9 3/16") apart from each other. The enclosure also houses five PCBs (seen behind the speakers.)

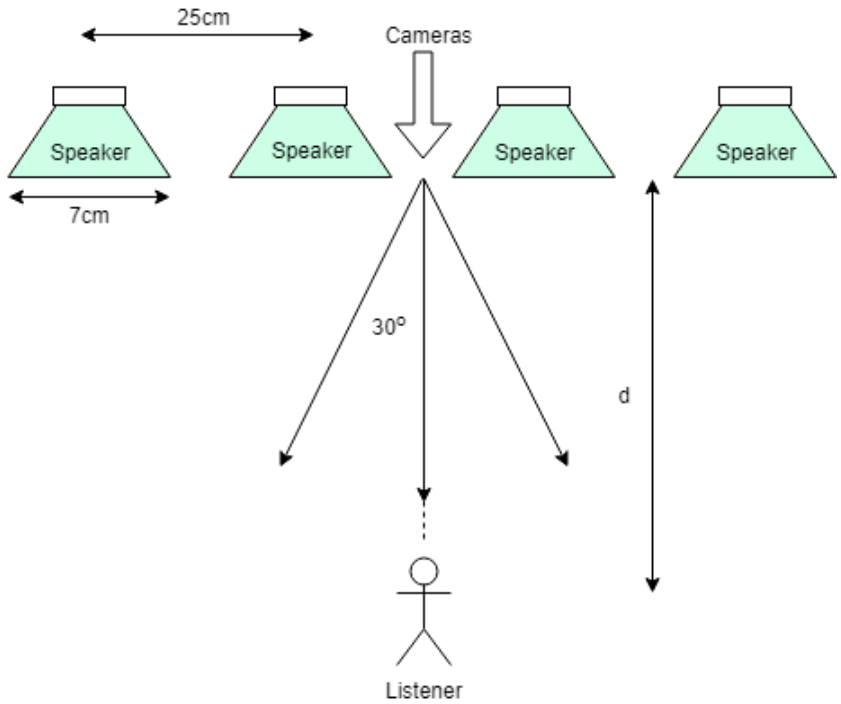

Figure 2: Physical Design

Justification: We chose to place the speakers at a distance a of 23.3cm apart from each other in order to allow for steering accuracy without sacrificing audio quality.

If the speakers are placed too far apart, then the far field approximation, upon which our project is based, becomes invalid unless the listener stands a long distance away from the enclosure. However, if we place the speakers too close to each other, then we are constrained by the sampling frequency of the music, and our steering becomes less accurate. With $a = 23.3$cm, we are able to steer the sound at 3° intervals, all while being able to assume the far field approximation while the user stands a reasonable distance away from the enclosure.

Figure 3 shows how the difference in distances from the far left and center left speakers (or $r_2 - r_1$) changes as the user moves farther away from the enclosure (d increases.) We find $r_2 - r_1 = \frac{d}{cos(tan^{-}1(\frac{3a}{2d}))} - \frac{d}{cos(tan^{-}1(\frac{a}{2d}))}$. By taking $r_2 - r_1$ as a physical time delay, we

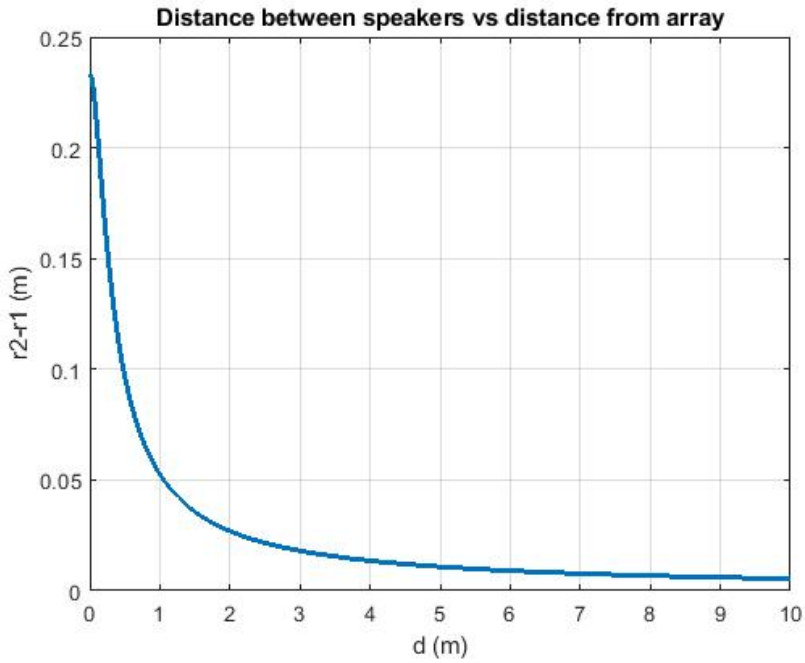

Figure 3: $r_2 - r_1$ vs. d for $a = 23.3$cm

can determine the phase shift each signal would experience. The phase shift depends on the frequency and distance from the speakers, and this is shown in Figure 4.

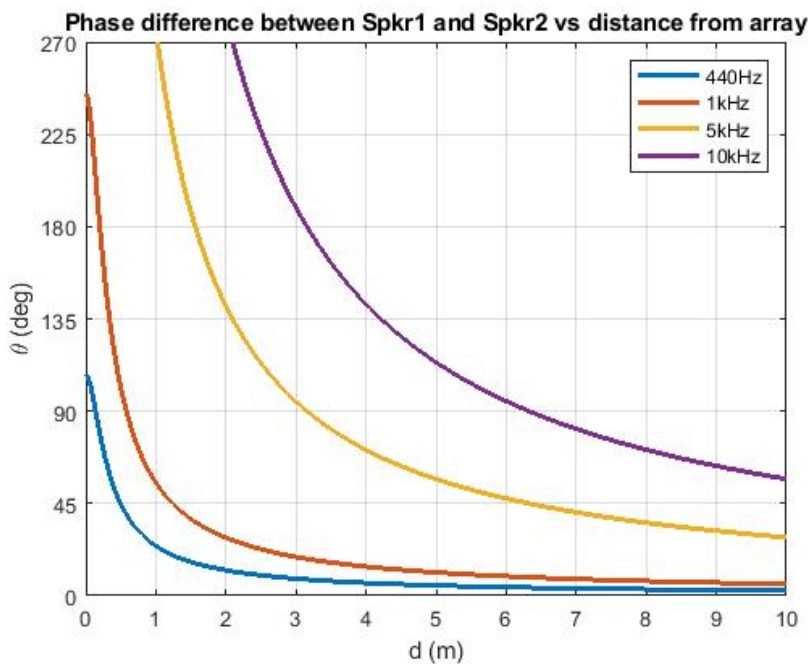

Figure 4: Phase shift vs. d for $a = 23.3$cm

- **Signal Input Module:** This module prepares an input signal to be used in the control module.
  - **Auxiliary Input:** In our design, we take an input from an auxiliary jack/cord connected to a music storing device, such as a phone, which is then filtered and sent to the ADC.
  - **ADC:** An ADC is used to convert the analog signal from the auxiliary port to a digital signal that can be delayed by the microcontroller.

  Justification/Alternative Designs: Other signal input options include using stored files, from a flash drive for example, or using Bluetooth. Using stored files would require complex interfacing since there could be different formatting issues. Using an auxiliary input and and ADC is simpler while also more robust because you can send in any signal. An early reach goal was to incorporate Bluetooth, but we did not reach this point early enough in the semester to include this functionality.

- **IR Receiver Module:** This module receives data about the location of the listener and reports it to the control module. It must be capable of updating the status of the listeners location at least every two minutes.
  - **IR sensing camera(s):** IR sensing cameras are used to detect where the listener is in the room. This tracking information (specifically the x location) is then sent to the microcontroller to be processed.
  - **Manual Tracking Option:** Our design also includes an operating mode where the user can manually steer the sound mode using a potentiometer voltage divider circuit. As the user adjusts the potentiometer, the sound is steered throughout the room.

  Justification/Alternative Designs: We selected these cameras because of their simple interface with Arduino via I^2C and their ability to output accurate location information. The biggest issue with these cameras is that they have a default I^2C address programmed into, so two of these cameras can not be placed on the same I^2C bus. A design alternative would be to find a better tracking camera that allows for this interfacing, or to use an MCU with multiple I^2C buses. The design for the tracking interfacing is very modular, and many design alternatives exist. This topic is further discussed in the Uncertainties/Future Work section in Section 5.

- **Control Module:** This module takes in two inputs: the input samples, from the Signal Input Module, and the location information of the listener, from the IR Receiver Module. It uses the tracking information to calculate the appropriate delays and applies them to four outputs (one for each speaker).

  - **Microcontroller:** An ATmega328P microcontroller is used to process the tracking information provided by the IR sensing cameras, do the necessary calculations to determine how much to delay each speaker in order to "steer" the sound, and applies the delays.

  Justification/Alternative Designs: We opted to use the ATmega328 because of its portability. You can upload a program using the Arduino UNO board, then place the ATmega chip on our control board. It is also robust and there is plenty of documentation available to guide us. We faced issues with getting it to process the information fast enough. After learning about this limitation, we now would consider a faster microcontroller. Possibly the hardest part of implementing our design was optimizing our code so that the sampling rate of the signal was fast enough to not have an appreciable effect on the quality of sound.

  - **DACs:** The DACs are used to convert the digital signal from the microcontroller to an analog signal that the speakers can use. They are placed at the output of the microcontroller and input to the power amps. The DACs have a 12-bit serial input interface.

  Justification/Alternative Designs: A design alternative for the entire Control Module is to use a DSP board to control the delays. This option would be faster but there would be issues in interfacing with a microcontroller. There are also typically only two channels on DSP boards (two in, two out) whereas we wanted to use one inputs and four outputs. DSP boards are typically designed for more complex applications and are also more expensive.

- **Speaker Array Module:** This module amplifies the signal and then projects the appropriate sounds for the listener to hear. This module is needed so that the output can be heard by the listener and an increase in the decibel output can be detected.

  - **Power amplifiers:** The power amplifiers are used to amplify the signal so that the speakers can output the audio. It powers the output of the DACs and

sends the signals through the speakers. The schematic for the power amplifier board can be seen in Figure 5.

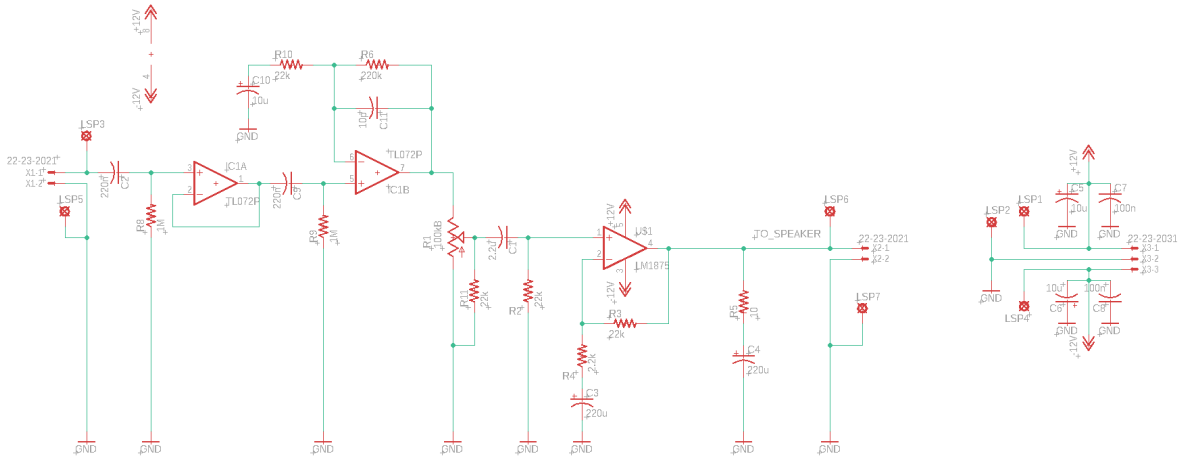

Figure 5: Power Amplifier Board Schematic [4]

Justification/Design Alternatives: The current circuit for the power amp uses the LM1875 chip, a 20W opamp. The circuit went over many revisions, and the current design is preferable for three reasons. First, the maximum current draw is 100mA per board, whereas the other designs required approximately 0.6A per board. Second, the IC providing the current doesn't get dangerously hot, and dissipates heat effectively. Third, this design is able to output more volume through the speakers than any other design. Because the LM1875 is a versatile and powerful chip, it was used in the power amp circuit.

- **Speakers:** The speakers convert the electronic signal of the song being played to directional air pressure (i.e. music). It receives the signal from the power amplifiers.

Justification/Design Alternatives: When considering options for speakers, we needed a speaker with a high enough wattage to prevent speaker blowout, while also having a low enough wattage so that a reasonable low-power amp would be able to drive it. Our speakers are rated at 4W-10W, which complements the power amplifier design. It also needed to have a wide frequency range that could support low frequencies (as low as 150Hz). We also considered the size of the speakers, since they needed to be able to be spaced at the specifications outlined in the physical design section above.

- **Power Module:** This module supplies all active components of the design with power. This includes: the microcontroller, DACs, power amps, ADCs, opamps, and IR cameras.
  - **Power Supply (5V):** A 5V power supply supplies power to the control and signal input module. The supply needs to be steady, well-filtered, and able to provide enough current to adequately power the digital circuitry involved in processing the audio signal.
  - **Power Supply (±12V):** A ±12V power supply is necessary to provide power to the power amplifiers and the opamps. The power amplifiers require a stronger power supply because the electrical output of the amplifiers are physically moving the diaphragms of the speakers. Therefore, a higher current draw should be expected. The opamps also require a higher power supply in order to properly interface with the output of the DACs.

Justification/Design Alternatives: We opted against building our own power supply after discussions with TAs and professors. We chose a power supply capable of supplying ±12V and 5V because of our design. We chose one that could interface with the PCB via a DIN connector.

3 Verification

Power Amplifiers

Verifying the power amplifiers was a relatively simple task. The schematic for the PA had been rigorously redesigned and prototyped, and the breadboarded circuit overcame all expectations. Not only was the circuit simple, it was loud, drew much less current than expected, and wouldn't overheat. So, it wasn't much of a mystery whether it would work in our final design. The PA PCB was populated, supplied with +/-12V, and had its output fed into a bookshelf speaker. First, we played a sine wave from a waveform generator (f=1kHz, Vpp=0.2V). Once it was confirmed to be working, we then played music through the power amp, to ensure that the power amp was amplifying a sound with a clean and reasonable frequency response.

Later in the design process, we discovered our PA's output was clipping harshly. This is because the PA was designed to have an input signal voltage between 0-200mV, but the DACs output a voltage between 0-5V. The gain stage on the PA amplifies the input by 11 before sending it through a voltage divider that leads into the power amplification section. Therefore, our input buffer, which is powered by a +/-12V supply, was trying to handle signals with a maximum peak of +/-27.5V! Therefore the gain stage in the input buffer was modified to only have a gain of 2, and the output of the PAs were no longer clipping.

Interfacing MCU with the DACs

In order to verify that the microcontroller and the DACs were interfacing correctly, we wired the components on a breadboard and sent in sample bit values to test the output. We ran into multiple issues with interfacing these two devices, and we were able to determine that the output opamp required a larger power supply.

Once that was resolved, we programmed the microcontroller to output various digital signals such as a square wave, a ramp wave, and a sine wave. We then verified the analog output was correct using an oscilloscope and probing at the output of the opamp used in the recommended unipolar binary operation for the DACs.

Interfacing MCU with the ADC

To test the interfacing between the MCU and the ADC, we wired a potentiometer across 5V and ground, and fed the wiper into the ADC's input. Then we attempted to interface the MCU with the ADC, and the MCU would read the bit values sent by the ADC, and

would print them to the serial monitor. Once successful, we attempted to see how fast the ADC could run, by having the MCU strobe a digital pin whenever a read-in was complete. This gave us the confidence that the ADC would be able to keep up with the high sampling frequency of the DACs, and we then began the process of interfacing all three modules.

Integrating All Modules

Once we populated the circuit boards and connected the modules, we programmed the MCU to output a sine wave. This would show that the interface between the microcontroller, DACs, power amps, and speakers was functioning correctly. We then used a potentiometer controlled voltage divider circuit to introduce steering in our design. When the potentiometer was pointed towards 0V, the MCU would steer the sound at a -30° angle, and 5V would result in 30°. The microcontroller code would then delay the output signals appropriately.

This was when we started to face timing issues. Once the delays were being applied, the microcontroller was taking too long to process four distinct signals. We researched different Arduino code optimization techniques including: writing directly to the port registers, using lookup tables, using bytes instead of ints, manipulating bits for quicker bit shifting, avoiding modulo and other time consuming operations, and minimizing the number of instructions as much as possible.

Loading a signal through the ADCs proved to be time consuming as well so when we interfaced the signal input module with the others, we needed to further optimize our code. Through further trial and error we were able to attain a sampling rate of about 24kHz, but opted for the slower 16kHz to ensure stability and reliability.

Once the timing issues were resolved we were able to test that we could delay the signal first by using the manual tracking operation explained above. The oscilloscope output shown below in Figure 6 shows the four signals for each speaker as we adjusted the potentiometer. When viewing a sine wave, it was clear to see the signals shift. When there was no delay (so directly the sound straight out in the center) then the four signals aligned. As we adjusted the potentiometer, we could see in real time the signals separate showing the linear delay.

Next, we set up the IR sensing camera as the tracker. We could see the same changes on the oscilloscope reflecting the location of our test IR source. Finally, we reconfigured the code such that the microcontroller checks for an I^2C device (the camera) and if there is one then it uses the delay calculations appropriate for the camera output. If it does not

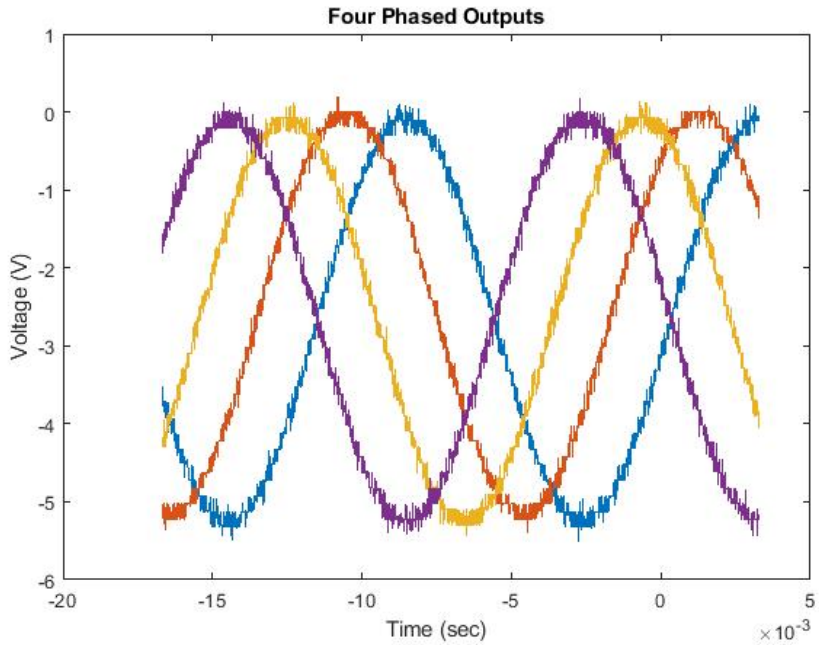

Figure 6: Output Sent to the Four Power Amps

detect an I^2C device then the microcontroller is directed to use the calculations for the manual tracking operation.

Figure 7: Finished Project in its Enclosure

4 Cost & Schedule

4.1 Cost Analysis

To calculate our labor costs, we are assuming a pay of $40.00 an hour, for two people working 10hrs/week for 14 weeks, multiplied by 2.5x. We calculate our costs due to labor to be $28,000.

$$\text{Total Costs} = (2 \text{ people})\frac{\$40.00}{\text{hr}}\frac{10\text{hrs}}{wk}(14 \text{ weeks}) = \$28,000$$

Part:	Cost (prototype):
IR cameras	$48.52
DACs (serial input) (x4)	$42.92
Speakers (x4)	$24.02
Arduino Uno	$22.00
Power Supply	$43.38
ADC	$30.67
IR Source	$0.00 (in lab)
Pushbutton	$0.27
Molex Connectors (assorted)	$17.40
DIN Female Connector	$3.00
Crystal (16MHz)	$0.69
PARTS SUBTOTAL:	$235.01
LABOR SUBTOTAL:	$28,000
TOTAL:	$28,235.01

Table 1: Cost Table

4.2 Schedule

Date	Dave	Rosemary	Notes
2/4/19	Research for proposal	Research for proposal	Proposal Due
2/11/19	Research power amplifier designs, components	Research control module components, designs, feasibility	
2/18/19	Investigate acoustical considerations, feasibility	Research DACs and microcontrollers, interfacing and applications	Design Document Due
2/25/19	Research power amp topologies, current draw considerations	Order parts list, begin design for control module schematic	Design Review
3/4/19	Order necessary components	Order parts, design schematic layout for interface between control module	
3/11/19	Prototype power amp design, design preliminary PCBs and place order	Finalize design for control module PCB	1st Round PCB Orders
3/18/19	Design and prototype other power amp designs, finalize schematic	Order parts, begin test plan for interfacing DACs/microcontroller	Spring Break
3/25/19	Interface DACs with ATMEGA	Order parts, interface DACs/microcontroller, test proper communication, make changes to PCB design	
4/1/19	Revise PA circuit boards and place final order of PCBs	Interface DACs with ADC, make changes to control PCB design	Final Round PCB Orders
4/8/19	Build enclosure and populated circuit boards	Integrate modules into single enclosure, test operation, test IR cameras	

Date	Dave	Rosemary	Notes
4/15/19	Integrate all modules, refine code, incorporate manual tracking	Integrate all modules, refine code, incorporate manual tracking	
4/22/19	Fix PCB traces, integrate ATMEGA chip, finalize project	Incorporate IR sensing cameras, fix PCB traces, put ATmega on PCB	Demo
4/29/19	Prepare for presentation, finish final report	Prepare for presentation, finish final report	Final Presentation

5 Conclusion

5.1 Accomplishments

We were able to successfully interface all of the modules such that the speakers could play a song and delay the signal according to the actively tracking location information. The sampling frequency was fast enough such that the music sounded clear when played through the speakers. The delay could be controlled using either an IR sensing camera, by moving an IR source through its field of view, or by adjusting the potentiometer on the manual tracking operation. The effect of the phase correction was noticeable to the human ear when playing a single tone so that when the user stands in front of the speaker they can hear the change in the volume and hear the direction change when tracking information changes.

5.2 Uncertainties/Future Work

Slow Sample Rate

The biggest issue we faced in the design process was optimizing the code such that the 16MHz ATmega328 was capable of processing all of the instructions fast enough to reach a sampling rate of 44.1kHz. We were able to get the sampling frequency to 16kHz. Another constraint was that the ADC took time to convert the signal. Without the ADC constraint the sampling rate would have been 20kHz instead of 16kHz.

Limited I^2C interface for IR Cameras

Another issue we faced was interfacing more than one IR tracking camera. The IR cameras were selected at an early stage of the design process for their simple interface with Arduino using I^2C. The issue arose in that each of these specific IR cameras have a hardwired I^2C address. That means that they could not be directly put on the same bus- one of the addresses would have needed to be changed. This could be done by using a breakout board that could change the default I^2C addresses, by using an additional microcontroller with two buses to separately process each camera before sending the information to the control module, or by inverting the SDA and SCL lines for one of the two cameras.

Poor IR Tracking

Another issue with the IR tracking portion of our project was the limited capabilities of the IR cameras we selected. The cameras were ideal for communicating with an Arduino and were capable of reporting location information of the IR source in real time and with adequate accuracy. Their tracking limitations were that it can only track an IR source that is within 3m of the cameras which means that the speaker array would not be useful for a larger room. Another limitation is that the listener would have to be holding/wearing some sort of IR beam big enough for the sensor to detect it. The heat from a human body is not sufficient to be detected by these cameras. If we were to continue working on this project, we would definitely look into more capable IR sensors or even abandon IR tracking and use a different indoor positioning system.

Molex Connectors

A more minor issue we faced was the quality of the connections being made by the Molex connectors. We opted to use Molex connectors because that is a connecting agent with which we were familiar. We wanted to be able to keep the modular design of the project by allowing each connection to be broken without cutting the wires, resoldering, etc. The issue with the Molex connectors is that sometimes the pins would be slightly askew and the connection would become compromised, resulting in the speakers to become noisy or make loud spontaneous noises if moved too quickly. An easy solution to this problem would be to hardwire the connections or to find better connectors, though that may be more expensive. Something else that might help would be to add screw holes to each of the PCBs and mount them more securely to the enclosure.

5.3 Ethics & Safety

On the surface, our project poses no immediate ethical or safety concern. Our project cannot endanger others, won't have a minuscule effect on global health, nor does it deal with any personal information. However, our project does pose a few health risks to those who operate it and to those who are in the direct path of sound.

The greatest risk our project poses to public health is that exposure to loud sounds for long periods of time can lead to hearing loss. To address this, we put proper constraints in place at multiple levels of the project to assure auditory safety. Our power amps will deliver at most 1W of power through each speaker, which will provide approximately 80dB of sound to a listener standing one meter away from the speaker array. We predict

that we will likely restrict our speakers to only put out a quarter watt of power, but may require extra headroom in case outside noises become a concern while calibrating our system.

In addition, our project involves designing and constructing power amplifiers for the speaker array. The power amp will run off of a ±12V power supply, so we must be conscientious of those who construct and operate this device. Our power amps will be enclosed and wires coming to and from the amplifier module will be fastened securely. In addition, multiple circuit breakers will exist at every level of power consumption to assure that any shorts won't harm the circuitry or, more importantly, the user. We will adhere to #1 in the IEEE Code of Ethics and make design decisions "consistent with the safety, health, and welfare of the public" [3].

Finally, we will act in accordance of #5, #6, and #7 of the IEEE Code of Ethics [3] in order to contribute to the development of audio technology. We will do this by seeking out criticism of professors and teaching assistants that have expertise on the details of our design, and properly credit them for their involvement.

A Requirements and Verification Table

Requirements	Verification	Verified?
Control Module		
Microcontroller: Must be able to read a digital audio signal and send its values serially to the DAC's within 11 microseconds.	a. Input a constant test voltage and connect a digital I/O pin to an oscilloscope. Program the microcontroller to serially output the test voltage every 11 microseconds. Ensure output takes less than 11 microseconds. b. Change the test signal to a signal with frequency 5.51kHz and repeat.	No
Microcontroller: Must be able to store a large enough range of the audio signal to steer the sound at a 60 degree angle.	a. Create a data or loop structure with 63 fields. Load a repeating ramp signal with 32 fields into the structure, and have the microcontroller output the value across its digital output pins. Use an oscilloscope at each output pin to ensure that the value represented across the pins rises and recycles itself after 32 cycles.	Yes
DACs: Must support 44.1kHz sampling rate.	a. Use the microcontroller to serially load a constant digital test signal into the DAC and connect the output to an oscilloscope. Set the strobe and load pins accordingly. Confirm that it outputs the reconstructed audio signal b. Change the test signal to a signal with frequency 5.51kHz and confirm the DAC outputs the reconstructed audio signal.	Yes

Requirements	Verification	Verified?
Signal Input Module		
Must be able to convert an analog signal to a 12-bit digital signal, and communicate this value to the microcontroller within 25% of the sampling period	a. When given a constant DC signal, use an oscilloscope to confirm output is correct serial encoding b. When given a test signal with frequency 5.51kHz, use an oscilloscope to analyze serial output encodings, and ensure encoded values repeat the same pattern ([1, 0.7, 0, -0.7, -1, -0.7, 0, 0.7]) c. Ensure that the serial output of information takes less than 5.66 microseconds (25% of sampling period).	a. Yes b. Yes c. No
Speaker Array Module		
Power Amplifiers: Must be able to output at least 1W of power to speakers when given 24V of power	Apply a load at the output of the power amplifier circuit. Set the power supply to 24V. Use a multimeter to measure the voltage and current across the load. Use P=IV to confirm output is >= 1W.	Yes
Power Amplifers: Power output must be within 20% (1dB) of other speakers.	Use NdB = 20*log(Po/Pi) where Pi is the power calculated in part 1,2 and Po is the power used by the speakers, found in the verification below. Ndb must be <= 1dB.	Yes
Speakers: Volume output must be within 20% (1dB) of other speakers.	Set a microphone 3m away from a speaker. Apply a constant signal to the input of the speaker. Use the microphone to record the output of the speaker. Use MATLAB to determine the volume output. Repeat for the other speakers and compare the results. Must be <= 1dB	Yes

Requirements	Verification	Verified?
IR Receiver Module		
IR Cameras: Must be able to detect angle towards infrared source within 5% accuracy.	a. Set up camera so that it is horizontal to the ground and apply a 3.3V/5V voltage supply to power it. b. Measure out three positions a 0-3m radius from the camera and supply a heat source at each spot. Record the location using the IR camera at each point. Measurements must be within 5% accuracy.	Yes
IR Cameras: Must be capable of updating the position at least every 2 minutes.	Set up the camera as described above. Record measurements every 2 minutes.	Yes
Power Supply Module		
5V Supply: Must provide 5V ±5% at peak output current draw of 300mA.	Apply a load at the output of the power supply. Set the power supply to 5V. Use a multimeter to measure the voltage and current across the load. Voltage must be between 4.75V-5.25V.	Yes
±12V Supply: Must supply ±12V ±5% at peak output current draw of 1A.	Apply a load at the output of the power supply. Set the power supply to 24V. Use a multimeter to measure the voltage and current across the load. Voltage must be between 22.8V-25.2V.	Yes

References

[1] Kinsler, L. (2000). *Fundamentals of acoustics.* 4th ed. New York: John Wiley & Sons.

[2] Electronic Circuits and Diagrams-Electronic Projects and Design. (2019). *Electronic Circuits and Diagrams-Electronic Projects and Design - An Authentic Resource on Electronics.* [online] Available at: http://www.circuitstoday.com/ [Accessed 19 Feb. 2019].

[3] Ewh.ieee.org. (2019). [online] Available at: http://ewh.ieee.org/cmte/substations/posted_documents/ieee_codeofethics.pdf [Accessed 19 Feb. 2019].

[4] Dubla, R. (2019). *10W/8Ω power amplifier based on LM1875 - rohitbalkishandubla.* [online] Sites.google.com. Available at: https://sites.google.com/site/rohitbalkishandubla/10w8-power-amplifier-based-on-lm1875 [Accessed 26 Mar. 2019].

[5] S. A. Gelfand, *Essentials of audiology*, 3rd ed. Thieme Medical Publishers, 2009.