FPV Drone Shooting Game

ECE 445 Design Document

Kainan Yu, Jiarong Bai, Yixuan Wang

Group 53

TA : William Null

2/20/19

Table of Contents

1.Introduction

1.1 Objective

FPV(first person view) drone racing is becoming more and more popular these days but is still considered as small group entertainment since most people who enjoy playing this game are rejected by its operational difficulty. In order to improving flying skills, players usually need to find a large playground with extensive obstacles and stay away from people. However, such place is hard to find especially in city with large population density.That is one reason FPV drone is much more popular in Australia than Japan. Also, some player may get bored due to the limited number of flying routes and unchangeable obstacles. The interaction between drone players is only compete with each other to see who can use the least time finishing the route.
In response to the above problems, we decided to develop a first-person real-life shooting game based on the DIY drone. Each drone equipped with game accessories can emit laser signals to attack each other, and HP (health points) will be lost when get hit. The game system will also be able to detect the enemy that is approaching. With the game system, players can also perform skill training without the professional training yard, thus reducing the difficulty of finding the proper place. At the same time, the game increases the interactivity between the players and enhances the entertainment function of the drone. Players can find more fun when the club initiates a party.

1.2 Background

The FPV aircraft was originally launched on a fixed-wing model aircraft carrying FPV equipment. Later, people tried to mount the FPV equipment on a multi-axis aircraft with better maneuverability and flight. With its increasing popularity, multi-axis aircraft that maneuver the aircraft through obstacles through the first angle of view gradually become self-contained, that is, the common passing machine. With the FPV equipment, the operation mode of the cross-machine changes from the “third perspective” of the traditional model to the “first perspective”. The manipulation feels more like an electronic game, which not only brings the immersive sensory experience to the user, but also let the rider have a different gameplay than the traditional model. At present, the number of people participating in the cross-machine competition is growing rapidly. The United States, Canada, the United Kingdom, Italy, Switzerland, Japan and other countries have set up a cross-machine alliance, set strict competition standards,and regularly organize

large-scale professional events. The level of professionalism is getting higher and higher, and the participants are developing towards a younger age, and children are increasingly participating in this competition. On March 11, 2016, Dubai spent more than 100 million US dollars to hold the WDP (World Drone Prix) through the machine competition. The event has a total prize pool of up to $1 million, the most relevant business event, and the winner is the 15-year-old British teenager Bannister and his "Tornado X-Blades Banni UK" team. The cross-machine competition, which set a high bonus, attracted the attention of fans all over the world. On March 30, 2016, Jin Huidong, Chairman of the Korean Drone Sports Association, and Lu Qing, the head of China's “D1 Sky Arena”, and Terra, President of the Japan Drone Sports Association, established the Asian Drone Racing Association (ADRO).

1.3 High-level requirements list

● This is a drone attack shooting game which can support up to 5 players.

● Drones can send the attack signal (IR signal) to other drones and receive the attack signal. Drone can send and receive the hit feedback signal (RF signal).

● Game interface can be combined with the video taken by the camera and send to FPV goggle.

2. Design

2.1 Block Diagram

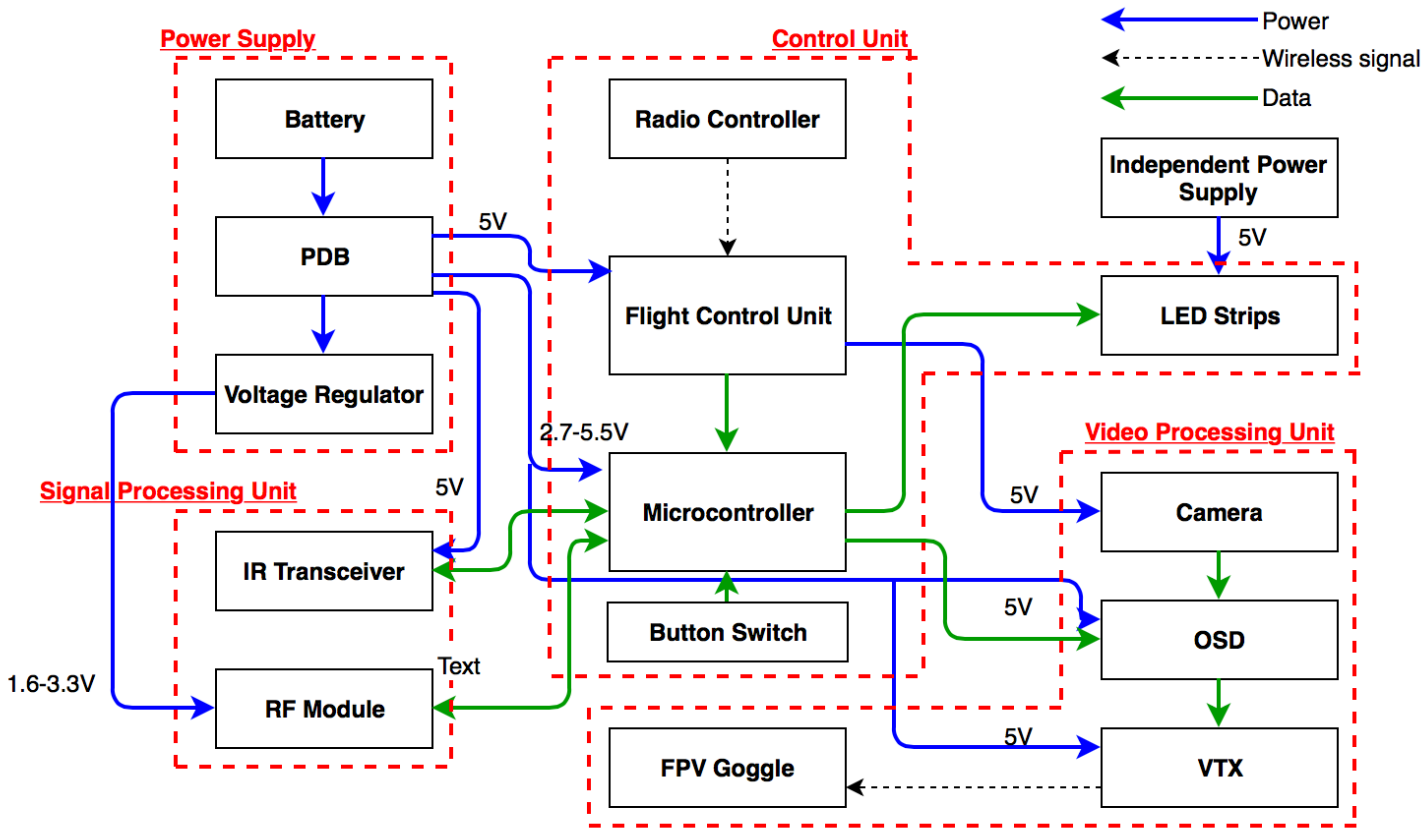

Figure 1. Top-Level Block Diagram

* PDB : Power Distribution Board
* OSD : On-Screen Display
* VTX : Video Transmitter

2.2 Physical Design

The components will be combined with a pre-build drone. The battery and the PCB including IR module will be put on the top of the carbon fiber skeleton.

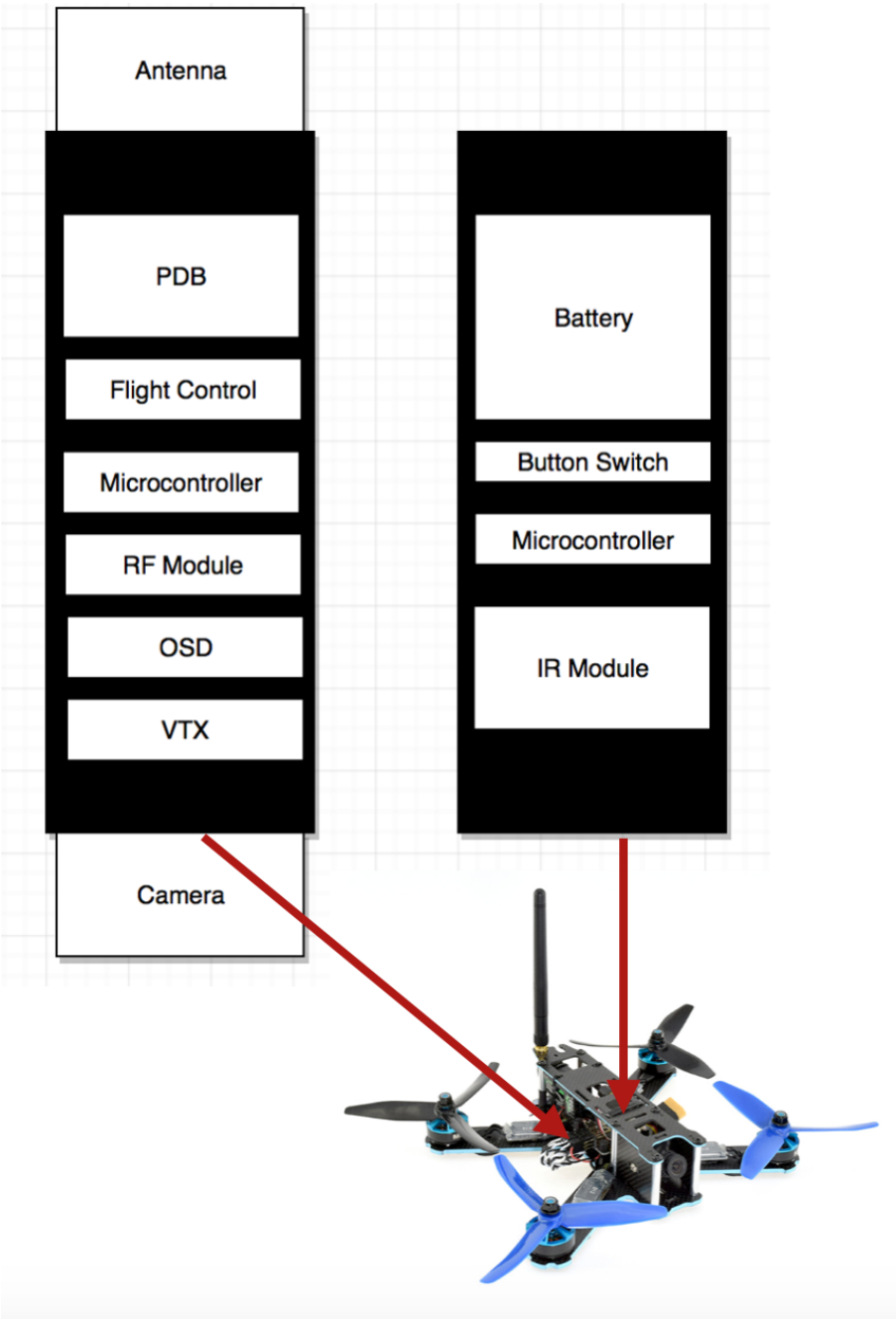

Figure 2. Physical Design

2.3 Block Design

2.3.1 Functional Overview

The game system mainly consists of three parts : the control unit that processes all the signals and controls the two transmitters and four LED strips, provides feedback to OSD ; the signal that processing unit includes IR and RF transceivers to simulate the shooting functionality ; the video processing unit that combines the camera and OSD to provide a game interface to the player.

2.3.1.1 Control Unit

The Flight control receives shooting command signal and turn on/off signal from radio controller and sends it to the microcontroller. Based on the signals received from Flight Control, RF transceiver and IR transceiver , the micro controller controls the transmit of IR and RF signals as well as LED strips. The microcontrller also processes the data need to be presented on the game interface and sends them to the OSD.

Requirements	Verifications
The microcontroller should be able to process RF signals and IR signals	Use RF24 library to encode and decode RF signals. Use RX,TX pin on the microcontroller to communicate with IR encoder/decoder.
Once receives the IR signal, the microcontroller should be able to command the RF transmitter to send the signal before the target fly out of the transmitting range.	The range of IR signal is around 50m and the range of RF signal is around 70m. For a drone flying at 27m/s, the microcontroller has 0.74s to process the command.

2.3.1.1 Signal Processing Unit

The Signal Processing Unit consists of two transceivers : RF transceivers and IR transceivers.The IR signal is used to simulate attack signals. IR signal encoded with player ID is emitted once the player presses the shooting button on the radio controller. Its range is around 50m with a beam angle around 10 degree which can fully cover the target. Once IR receiver receives the signal it decodes the signal and reports to the microcontroller.

The RF module transmits two types of signals. One is the hit-feedback signal, once the microcontroller receives the IR signal, the RF module will transmit the hit-feedback encoded with the attacker ID. RF module emits another type of signal — Location signal

when the drone is not under attack. The location signal encoded with player ID is served to tell other player that an enemy is under attack range.

Requirements	Verifications
The range of the RF signal should be around 70m.	NRF24L01 provide a range around 100m.Use voltage regulator to provide a lower voltage from 1.9v to 3.6v to adjust the range.
RF module should support receiving at least 5 signals at different frequency.	NRF24L01 works at 2.4GHz -2.525GHz, it can receive signals from 125 different channel. Let each player uses different channel to avoid inference.
Before the IR transmitter TSAL6100 transmits the signal , the IR signal must be encoded by the MCP 2120.	A: place an IR signal encoder/ decoder at the receive end and have it connected to the PC to monitor the received IR signal. B: first use the TSAL6100 IR transmitter to directly transmit the IR signal to the receiving end, then use the same TSAL6100 IR transmitter to transmit the IR signal that has been encoded with the MCP2120. C: compare the difference of two IR received signals.
IR transmitter TSAL6100 can transmit IR signal in range of (0, 50 meters).	place an IR receiver at the distance of 10m, 40m, 50m, and 60m. And record if the IR receiver receives anything at those distances.
IR transmitter TSAL6100 must transmit IR signal in a certain set of directions (+- 10 degree)	place IR receivers at the different angles compared to the direct signal. (+-50, +-40, +-30, +-20, +-10, +-5 degree from the direct signal and record if the IR receiver receives anything at those angles.

2.3.1.1 Video Processing Unit

OSD takes in the image signal from the camera and other interface signals from micro controller and overlays the game interface on the video. The video transmitter receives the processed video signals and sends them to the FPV goggle.

Requirements	Verifications
Operate on 5V power supply.	check LED that flags both video input(camera) and video output(VTX). When the data is not null for the input or output. then LED is on. if both LED is on, then the power supply should be correctly setup.
The camera actually transmit graphics into the goggle.	If both LED are on, but graphic is not showing up on the VTX, the connection between the OSD and VTX must be hooked up incorrectly.
graphics can be modified to the desired interface which includes health points(HP), warning if enemy air-drone is around, if won the game, and battery left.	If the graphics are showing up, whereas the interface are not showing the right info, there must be something wrong with the coding part.

2.3.1.1 Power Supply

The power supply for the whole game system comes from the battery and power distribution board on the original drone. Since most of the circuit components require 5V voltage, the distribution board can directly support most of the circuit components. The RF module requires voltage regulator to adjust the transmitting range of the signal.

Requirements	Verifications
The battery should support the flight for at least 5 minutes.	A 1500mAh Li-po battery 14.8V can support a flight at highest speed around 7 minutes.
Must avoid overheatting	Put the battery on the top of carbon fiber skeleton.
Provide 5V voltage to other module	Using a power distribution board which can provide stable 5V and 12V voltage.

2.3.3 Game Algorithm Flowchart (See Appendix)

2.3.4 Multiplayer Interactions

The game supports up to 5 drone players. When the game mode is on, each player selects the unique id number by pressing the corresponding button switch on top of the drone. Each drone can transmit and receive three different signals carrying id information :

Attack signal : IR transmitter sends the attack signal encoded with player id. Receiver recognize the signal and decode the id information to know the attacker's id.

Hit feedback signal : RF transmitter sends the signal with same id from attack signal. The controller checks whether the id of receiving signal matches the user. If id matches, controller increases the enemy defeated number.

Location signal : RF transmitter sends the signal encoded with player id. Receiver recognize the signal and decode the id information to know which player is approaching.

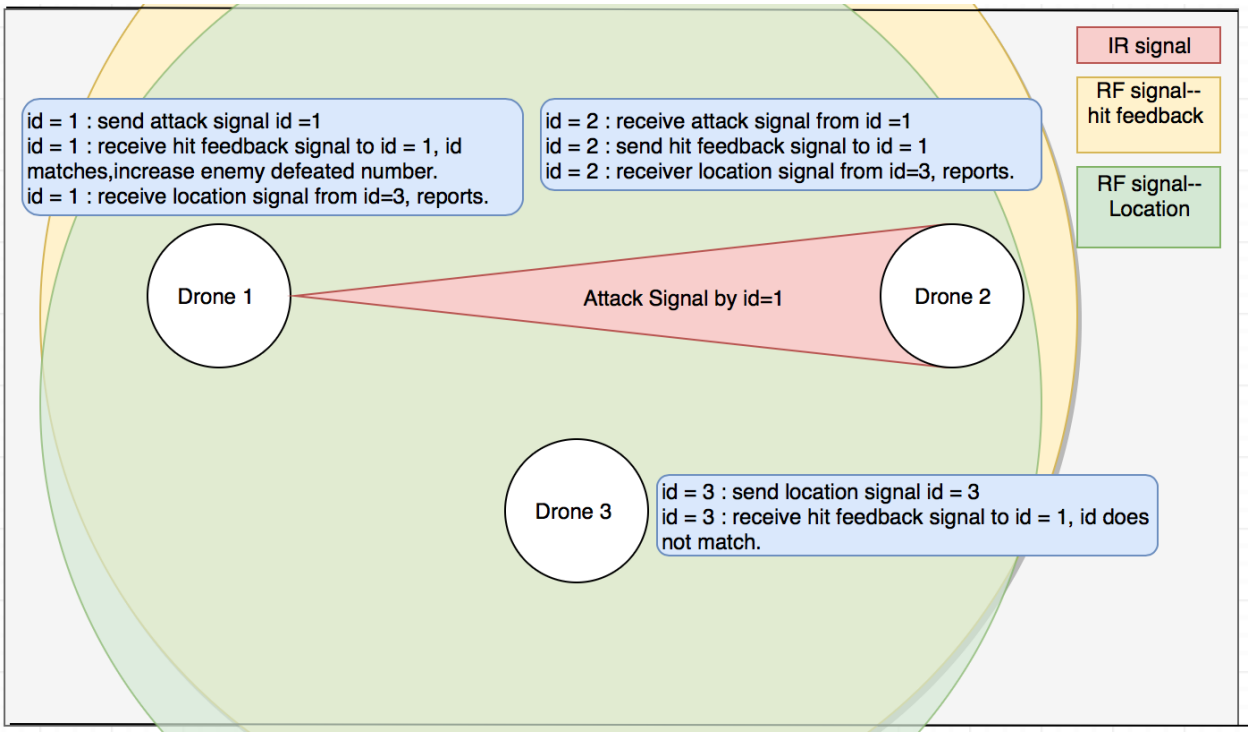

Figure 3. Multiplayer Interactions example

2.3.5 OSD UI Design

Data Name	Usage	Symbol
Health_point	Indicate the remaining life of the drone. Four hearts show on the screen initially and reduce with the Health_point value.	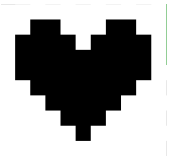
Enemy_defeated_number	Indicate the number of enemy hit by the player. Increase with Enemy_defeated_number	
Game_mode	If Game Mode =1, show the game OSD,otherwise turn off the game OSD.	
Enemy_nearby	If enemy_nearby =1, rise from the screen.	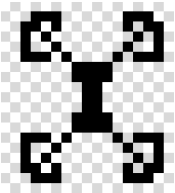
Speed	Representing the current speed of the drone. The length of the bar is proportional to the speed.	
Power_percentage	Representing the remaining charge of the battery. The length of the bar is propotional to the Power_percentage.	

Events Design:

1. If enemy_nearby = 1, show ‘Enemy is approaching’ .
2. If Heath_point = 1, show ‘Warning! Low Life ! ’
3. If Power_percentage <0.2, show ‘Warning! Low Battery ! ’
4. If Game_mode =1, show ‘ Welcome to the shooting Game, you are player X’
5. If receives the attack signal, show ‘ Attack by player X’
6. If receives the hit feedback signal, show ‘ hit player X’
7. If Enemy_nearby = 1, show ‘Warning !Enemy Approaching! ’

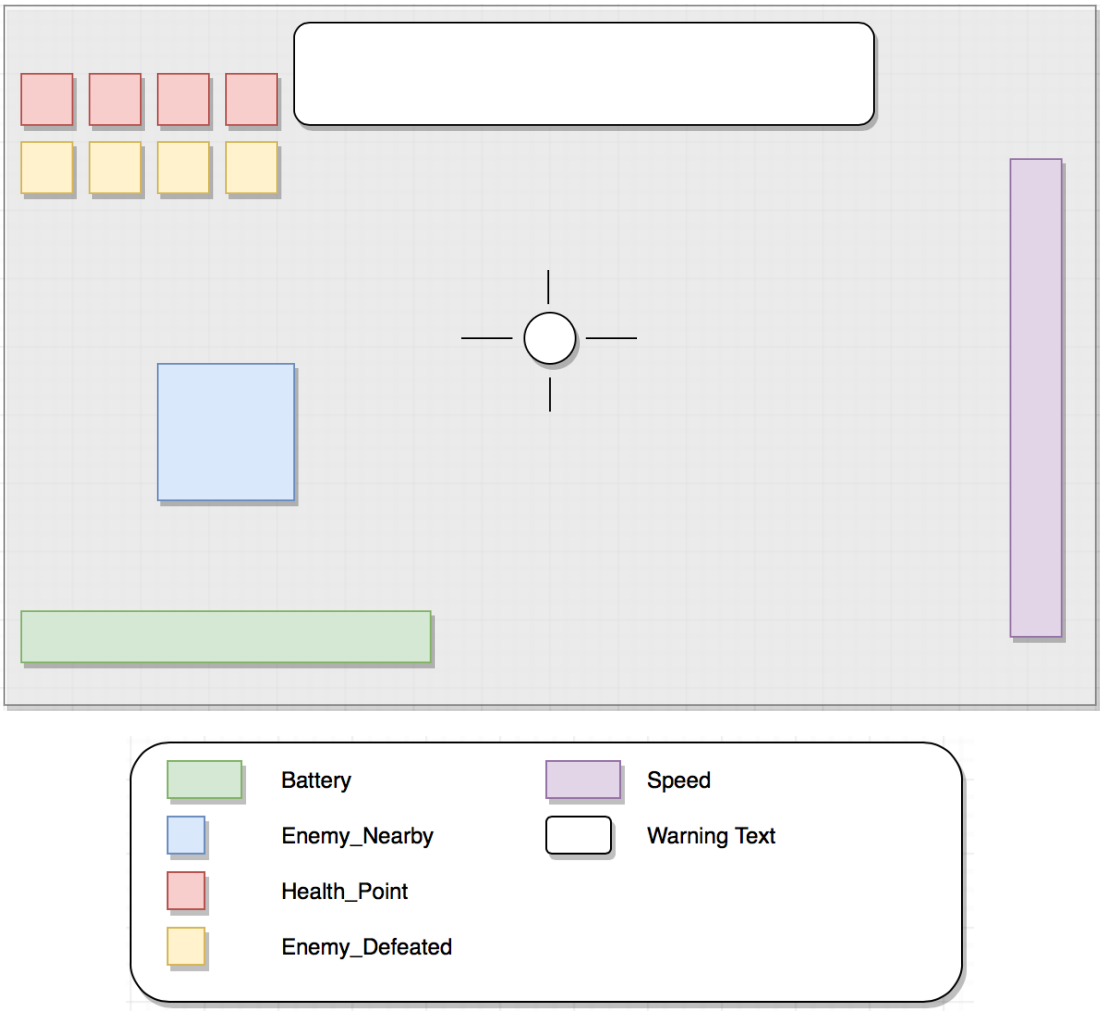

Figure 4 . Game UI Design

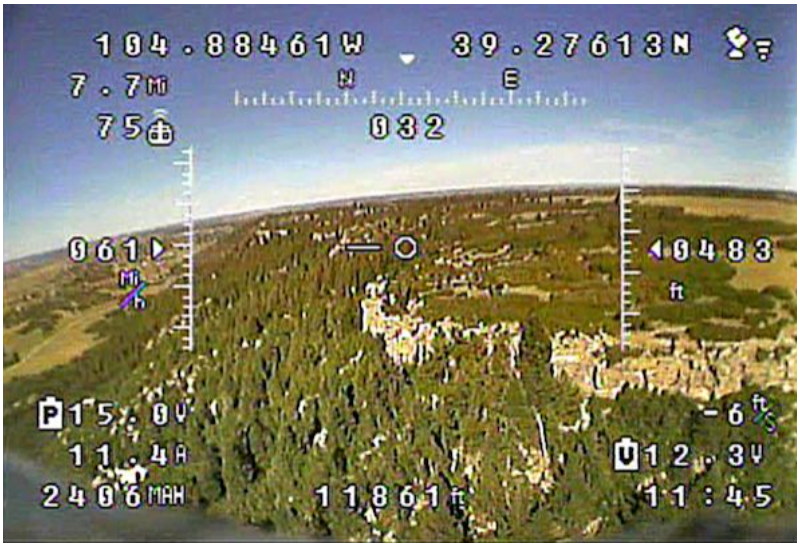

Figure 5 . OSD example

2.4 Tolerance Analysis

One important tolerance we must maintain is that we need to make sure drone A can "shoot" a reasonable large area when shooting from long distance while the target drones are at high speed."shooting down" another drone would be easier in this case.

We define an area, that when a drone is inside this area the drone can receive the IR shooting signal to be named as the "being shot area". When two drones are separated by the max shooting distance, 50m. The "being shot area" of one drone is calculated as follows:

50 * tan(10 degree) * 2 = 8 meters (diameter)
4*4 *pi = 50.26548245743669 meters^2 ("being shot area")

When viewing "being shot area" at 50m away, this 50 m^2 area is acceptable. Because the drones are moving very fast and we must make sure that the "being shot area" is big enough for shooting difficulty of this game. However, we don't want to make the "being shot area" too large. Because a drone will not need to aim carefully to shot down another drone if "being shot area" is too large,

Another important tolerance we must maintain is to avoid the IR signals interferences and RF signals interferences between the multiple drones. For the IR signals interference, it is completely fine to ignore. Because a drone sends out IR signal for a small period of time and also a drone sends the IR signal in a specific direction. The chance of two IR signals coming out from different drone interfering with each other is calculated as follows:
50.265/ (50^2 * 4 * pi) = 0.00159998464290282
This is the case when the two players attack at the same time. But in reality, attacking at the same time is nearly impossible since the IR signal only last for less than 10^-6 seconds.

For the RF signals interference. Since the RF transceivers are always on, we will need to let each RF transceiver to operates at a different frequency. There are 125 different RF transceiver channels for us to choose from. When we set each RF transceiver to different frequency, the RF signal interference will not occur.

3. Cost and Schedule

3.1 Cost Analysis

3.1.1 Labor

	Objective	Hour	salary ($) /Hour	Total ($)
RF transceiver	Build the RF communication on two board	20.00	30.00	600.00
IR transceiver	Build the IR communication on two board, test the receiving distance.	40.00	30.00	1200.00
OSD Design	UI Design,	50.00	30.00	1500.00
Assembly & Test	Assemble all the module with drone, test the signal strength during real flight.	100.00	30.00	3000.00
				15750.00

3.1.2 Parts

Part Name	Part Number	Manufacturer	Qty	Unit Cost($)	Total Cost ($)
microcontroller	ATmega328p	Arduino	4	4.83	19.32
bootloader	Arduino Uno	Arduino	1	23.00	23.00
OSD chip	MAX7456		2		
RF transceiver	NRF24L01	NORDIC	2	1.98	3.96
Button switch	SKHHAKA010		10	0.22	2.20
IR transmitter	TSAL6100		2	0.19	0.38
IR receiver	HS0038B		2	0.99	1.98
IR encoder/ decoder	MCP2120		2	1.06	3.12
LED strips			1	5.24	5.24
LED Module	WS2812		2	6.99	13.98
Capaticors					5.00
Resistors					5.00
LED diode			10		3.00
					86.18

*All the supported equipments (e.g. FPV goggle, Radio controller,etc.) are not included.

Grand Total = 15750+86.18 = 15836.18

3.2 Schedule

Week	Main Task	Kainan Yu	Jiarong Bai	Yixuan Wang
2/18-2/22	Working on design document;Buying all the components	Buy: IR transceiver +encoder/ decoder; Design Document:Tolerance Analysis;IR Schematics	Buy: OSD; Design Document:OSD Schematics,Safety and Ethnics	Buy: Arduino board and microcontroller, button switch and LED diode; Design Document: Block Design, Function Overview, Cost and Schedule.
2/25-3/1	Review PCB design	PCB of IR module	PCB of OSD module	PCB of RF and multiplayer module
3/4-3/8	Writing Code for each module	IR	OSD	RF and Control
3/11-3/15	Writing Code for each module,do simple signal test	IR	OSD	RF and Control
3/18-3/22	Spring Break	Spring Break	Spring Break	Spring Break
3/25-3/29	Test module on breadboard	Test IR module	Test OSD module	Test RF module and multiplayer interaction.
4/1-4/5	Integrate Protype, assemble all the parts with drone and do first round test	Integrate IR module PCB	Integrate OSD and	Integrate all the module with drone.
4/8-4/12	Refine Prototype	Adjust IR design for better signal receiving range during flight.	Adjust the UI design for better flight performance	Adjust multiplayer communication.

4/15-4/19	Prepare for Mock demo	Mock Demo	Mock Demo	Mock Demo
4/22-4/26	Prepare for mock presentation and demonstration	Demo	Demo	Demo
4/29-5/3	Prepare for Presentation	Present	Present	Present

4. Discussion of Ethnics and Safety

There are several potential safety hazards with our project. Firstly, the drone is powered by 4 propellers at the top with much high speed. Mistake in controlling the drones such as getting to close to people might result in injuries. To address the issue, we will demo the project in the space where there are few people around, and if possible we will DIY some proper propeller guards. The second safety problem might show up when the battery runs out. When the drone is out of power, it might fall to the ground and crash people who are underneath. To address such issue, we will setup warning when the battery is almost out of power.For the ethnic's part. There might be some open source codes we will utilize from the internet. We will formally and properly site the sources of the unitized data and info. And for our own development data, we will share most of the code and resources that we think might contribute to DIY drones industry. And since we will use the goggles for FPV shooting, there might be personal privacy recorded in game players' sight. All the video in the goggles will only be used for project developing and private images if show up in the videos, will remain confidential.We are responsible for the information that is sent through our technology. This spread of valuable knowledge is an implementation of the IEEE Code of Ethics, #5: "To improve the understanding of technology; its appropriate application, and potential consequences" [1]. We hope to bring education and communication to the most remote corners of the world. Unfortunately, risks surrounding the spread of information include piracy and mental health. Every day, people pirate music, movies, and even books via the conventional internet - and there is no reason to believe that our network will be any different. We are not explicitly giving out the tools to commit piracy or copyright infringement of any kind, but in a decentralized network it is impossible to track with any degree of certainty what information is shared. This would go against #7 and #9 of the IEEE Code of Ethics - the people commiting piracy are not properly crediting the work of others, and they could be injuring the copyright holders by sharing content without paying for it [1]. We do not currently have a solution to this - we do not believe it would be the right course of action to limit the utility of our network simply because we anticipate a small subset of our users engaging in piracy. On the internet, where a certain degree of anonymity is assured, there are fewer barriers to behaviors like cyberbullying. This type of harassment will adversely affect the mental health of those on the receiving end. It is entirely possible that the network will be used to discriminate by race, gender, or sexual orientation, violating #8 of the IEEE Code of Ethics, "to treat fairly all persons and to not engage in acts of discrimination based on race, religion, gender, disability, age, national origin, sexual orientation,gender identity, or gender expression" [1]. We plan to introduce the ability for node owners to "ban" certain devices

from services hosted on their node. The “banned” user would have no knowledge of this action; their packets would simply not return a response as the node hosting the service would throw them away instead of processing them. We believe this is the best course of action - any harassment can be stopped by an automated system, and the harasser(s) will never know that their messages aren’t being delivered. Our mitigation techniques align with the IEEE Code of Ethics, #1: “To accept responsibility...” [1]. There are many risks that present themselves as a consequence to access and free communication, but we believe that the advantages of open resources, which include free education and the potential for economic development, far outweigh the potential negative effects.

5.Citations

[1]. Ieee.org, "IEEE IEEE Code of Ethics", 2016. [Online]. Available:http://www.ieee.org/about/corporate/governance/p7-8.html. [Accessed: 20- Feb-2018].

[2].
Dejan:Arduino Wireless Communication – NRF24L01 Tutorial 2018[Online]. Available:https://howtomechatronics.com/tutorials/arduino/arduino-wireless-communication-nrf24l01-tutorial/[Accessed: 20- Feb- 2018].

[3].Mohannad Rawashdeh:RF 315/433 MHz Transmitter-receiver Module and Arduino, 2018[Online]. Available: https://www.instructables.com/id/RF-315433-MHz-Transmitter-receiver-Module-and-Ardu/[Accessed: 20- Feb- 2018].

[4]. HobbyTransform :Arduino Encoded and Modulated Laser and Infrared Serial Communication 2018[Online]. Available: https://www.instructables.com/id/Arduino-Encoded-and-Modulated-Laser-and-Infrared-S/[Accessed: 20- Feb- 2018].

[5]. Atmega328p datasheet:2018[Online].Available:http://ww1.microchip.com/downloads/en/DeviceDoc/Atmel-7810-Automotive-Microcontrollers-ATmega328P_Datasheet.pdf[Accessed: 20- Feb- 2018].

[6]. Atmega328p bootloader:2018[Online].Available:https://www.instructables.com/id/Burning-the-Bootloader-on-ATMega328-using-Arduino-/[Accessed: 20- Feb- 2018].

[7]. NRF24L01, multi-receiver address setting and bidirectional communication. 2018[Online].Available:https://howtomechatronics.com/tutorials/arduino/arduino-wireless-communication-nrf24l01-tutorial/[Accessed: 20- Feb- 2018].

[8]. Johnson: Arduino rookie tutorial:2018[Online].Available:https://zhuanlan.zhihu.com/p/42177370[Accessed: 20- Feb- 2018].

[9]. Arduino chinese tutorial:2018[Online].Available:https://zhuanlan.zhihu.com/p/36839509[Accessed: 20- Feb- 2018].

[10].HOW TO CHOOSE OSD FOR QUADCOPTER 2018[Online].Available:https://oscarliang.com/best-osd-quadcopter-fpv-data-on-screen-display-video/[Accessed: 20- Feb- 2018].

Appendix A Schematics

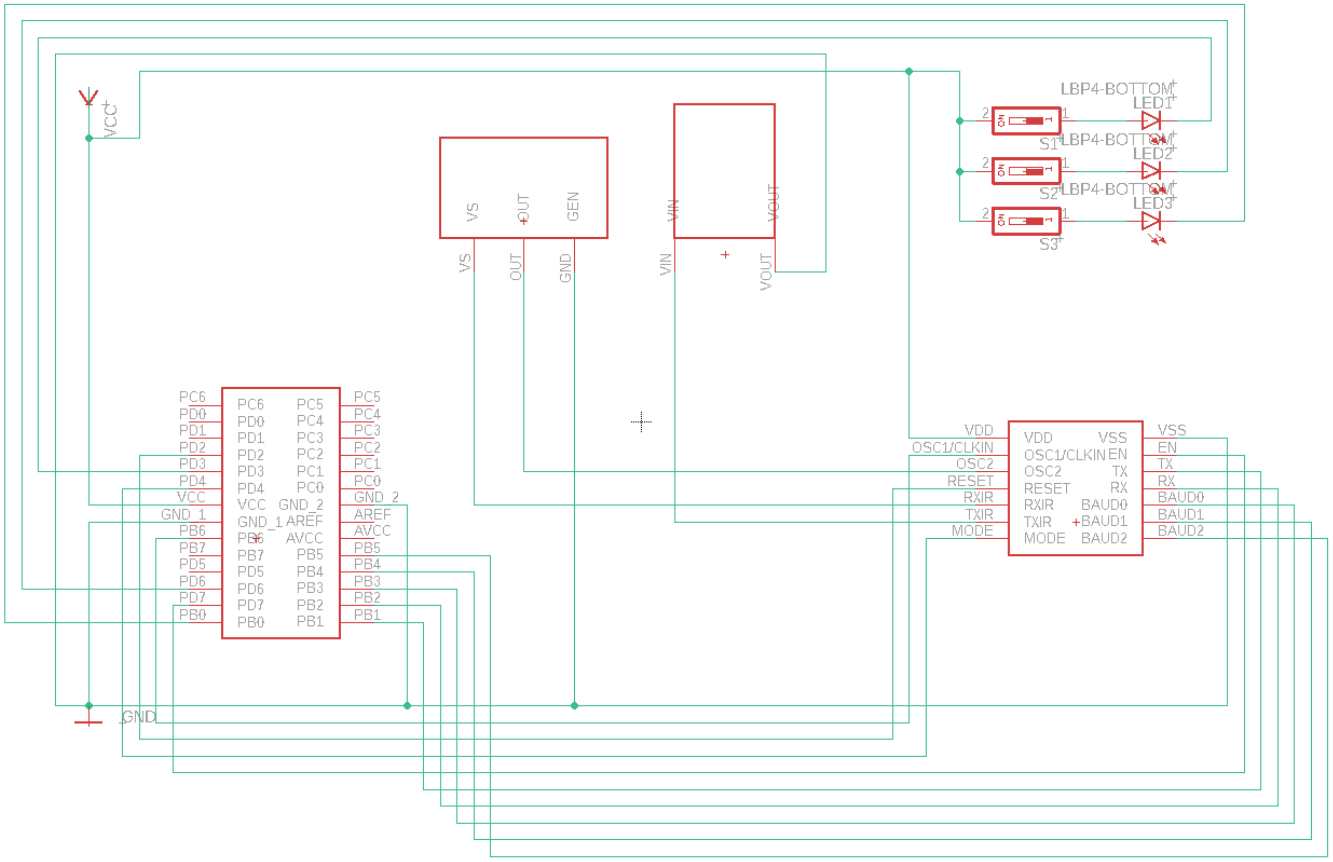

Figure 6. PCB for IR transceiver

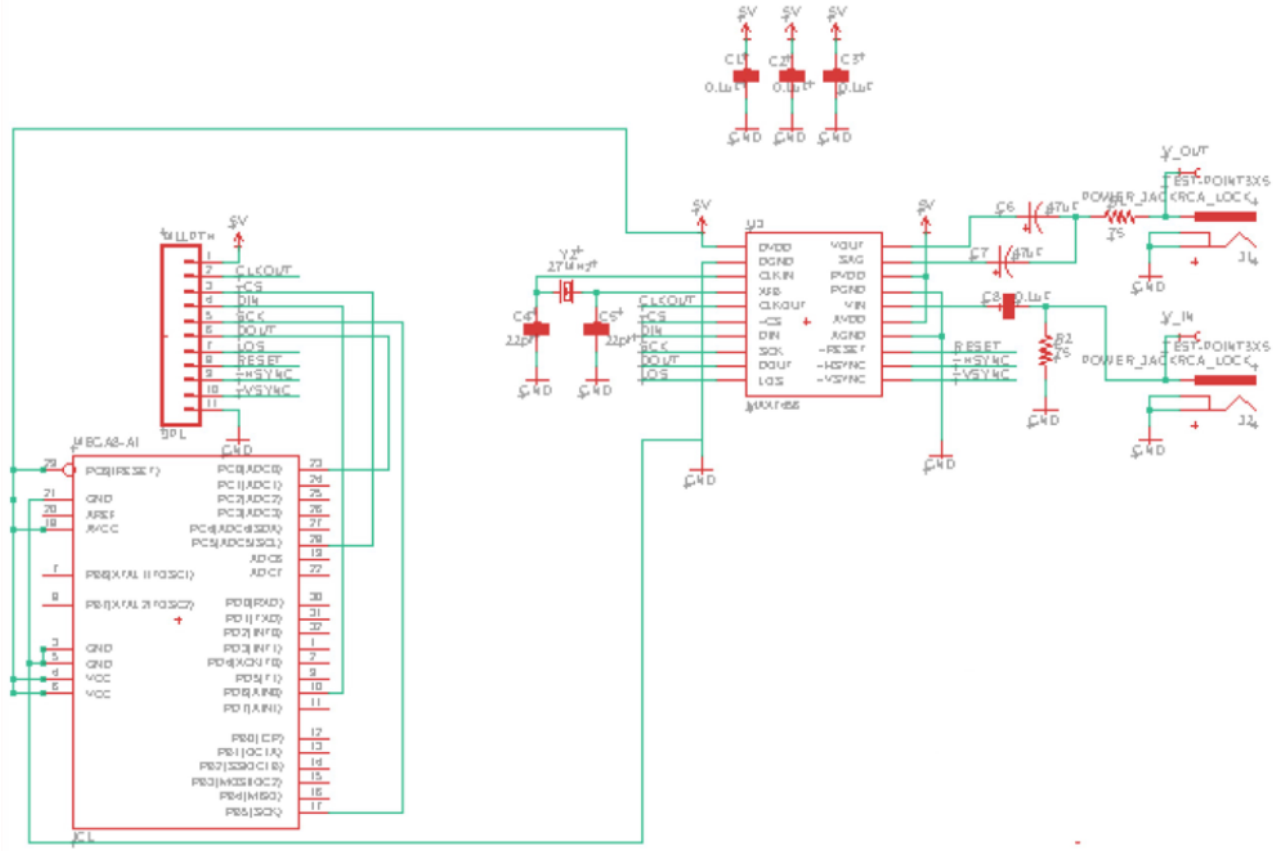

Figure 7. PCB for OSD

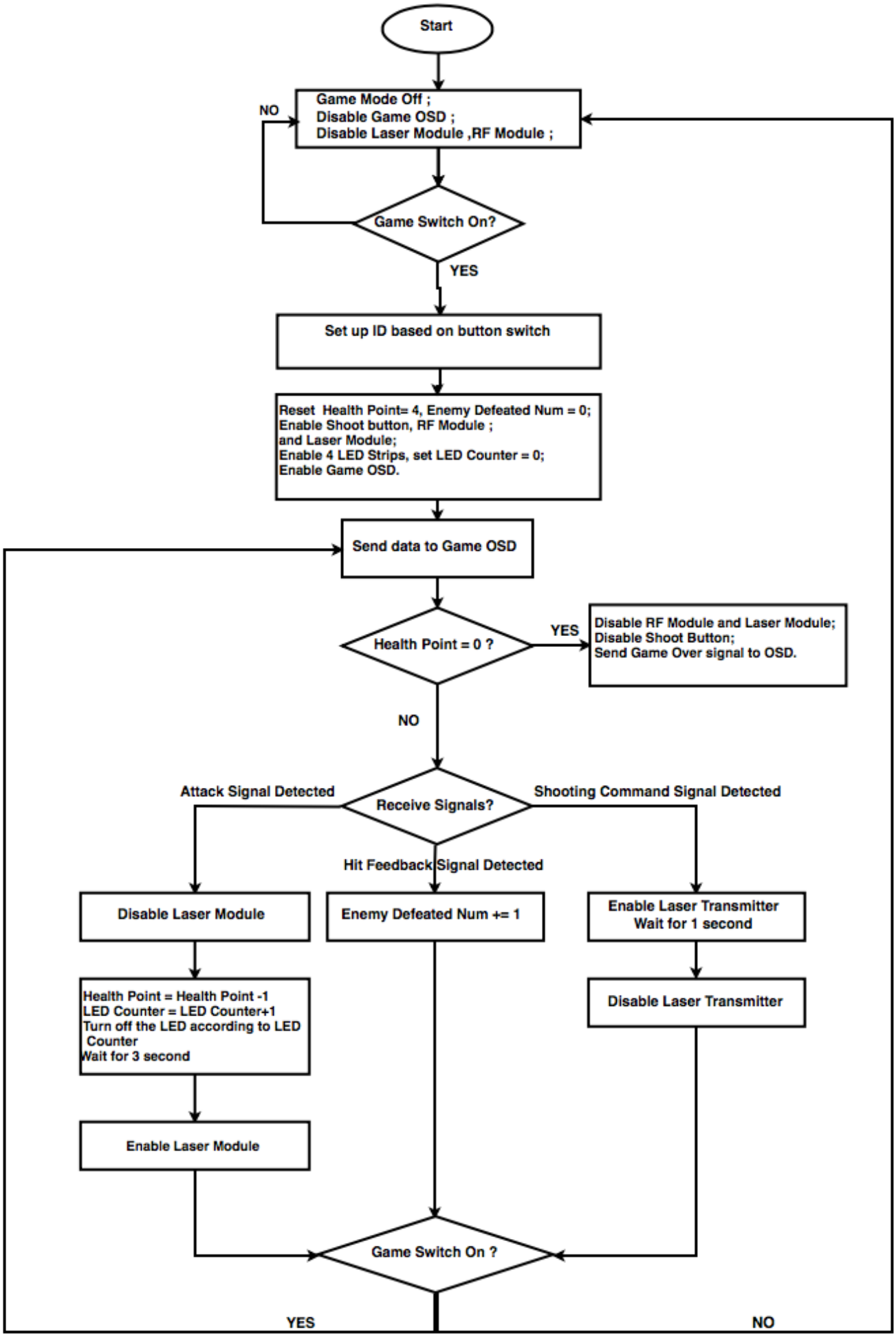
Start
Game Mode Off ;
Disable Game OSD ;
Disable Laser Module ,RF Module ;
NO
Game Switch On?
YES
Set up ID based on button switch
Reset Health Point= 4, Enemy Defeated Num = 0;
Enable Shoot button, RF Module ;
and Laser Module;
Enable 4 LED Strips, set LED Counter = 0;
Enable Game OSD.
Send data to Game OSD
Health Point = 0 ?
YES
Disable RF Module and Laser Module;
Disable Shoot Button;
Send Game Over signal to OSD.
NO
Attack Signal Detected
Receive Signals?
Shooting Command Signal Detected
Hit Feedback Signal Detected
Disable Laser Module
Enemy Defeated Num += 1
Enable Laser Transmitter
Wait for 1 second
Health Point = Health Point -1
LED Counter = LED Counter+1
Turn off the LED according to LED Counter
Wait for 3 second
Disable Laser Transmitter
Enable Laser Module
Game Switch On ?
YES
NO