Automatic Secure Locker

ECE 445 Design Document Check

Team 28: Jiaxuan Liu & Yanlin Chen

TA: Thomas Furlong

2/18/19

1 Introduction

1.1 Objective and Background

With the rapidly growing e-commerce industry and the increasingly mature logistics system, more people choose to shop online for their daily needs. However, although shopping online spares people the inconvenience of going to physical stores, the risk of package being stolen by random thieves also becomes rampant. Such a problem is more pervasive in apartments that are not equipped with package lockers or package receptionists. In this case, packages are usually left at the residents' front doors, which greatly increases the risk of package being stolen by people walking by.

In order to eliminate this kind of package thefts, we want to design an affordable automatic secure locker which can effectively help people securely store their packages and can be put right next to their front doors. This system is constituted by an electrically controlled locker, a control panel with an LCD display, a speaker and buttons, a security module with camera and alarm, a control unit that coordinates the operation of every other modules and a power supply. This secure locker normally remains locked until a courier enters last four digits of the shipping number from the control panel. During this process, the LCD display will give the courier enough hints on how to use the locker. Once the package is placed in the locker, the locker will relock itself to prevent someone else from accessing the package inside. To retrieve the package in the locker, the owner only needs to provide an owner-only password to unlock the locker. Other than enabling the owner to open the locker, entering the correct owner-only password will also give the owner the option to enter all the package information so that the couriers can open the locker with the shipping numbers. Although the mechanical lock is secure enough in most cases to keep the package inside safe, in order to prevent anyone from violently damaging the locker, the security module of the locker will be triggered if the locker is open without receiving a correct password. The camera will take a picture of the perpetrator and save it on a local SD card; the alarm will make a loud noise to scare the perpetrator away. In addition to all of the features above, this locker has another innovative feature: it can accept food delivery and pay the food delivery driver with cash. The locker will be open to the food delivery drivers after they enter the correct password (this password can be given to the drivers when the owner places the order). In this way, either it is because the owner is too lazy to come out to accept the delivery, or the owner is not at home, food can always be successfully delivered.

1.2 High-Level Requirements

- The locker needs to remain locked until someone with permission to open it.
- Add-on modules such as security module should be fully functional at any time.

- To save power, the system should enter sleep mode if not in use and should be woken up by an interrupt (such as a button press).

2 Design

The entire automatic secure locker is constituted by a power supply, a locker module, a control panel, and a control unit. A block diagram showing the interconnection between different modules is provided below.

2.1 Block Diagram

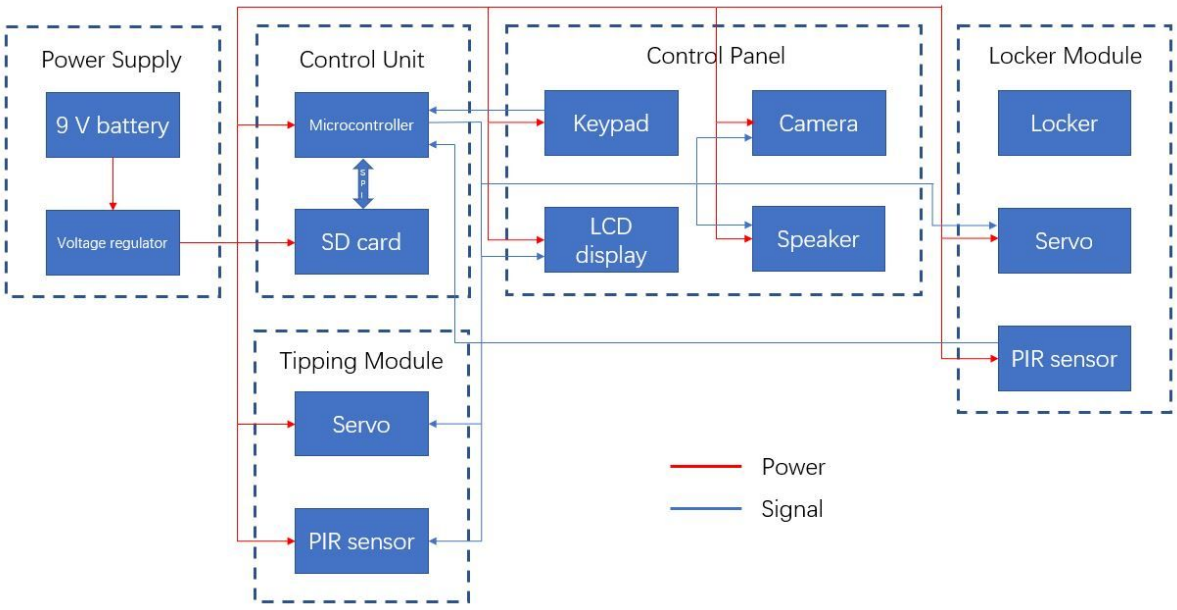

Fig. 1 Block Diagram of the Project

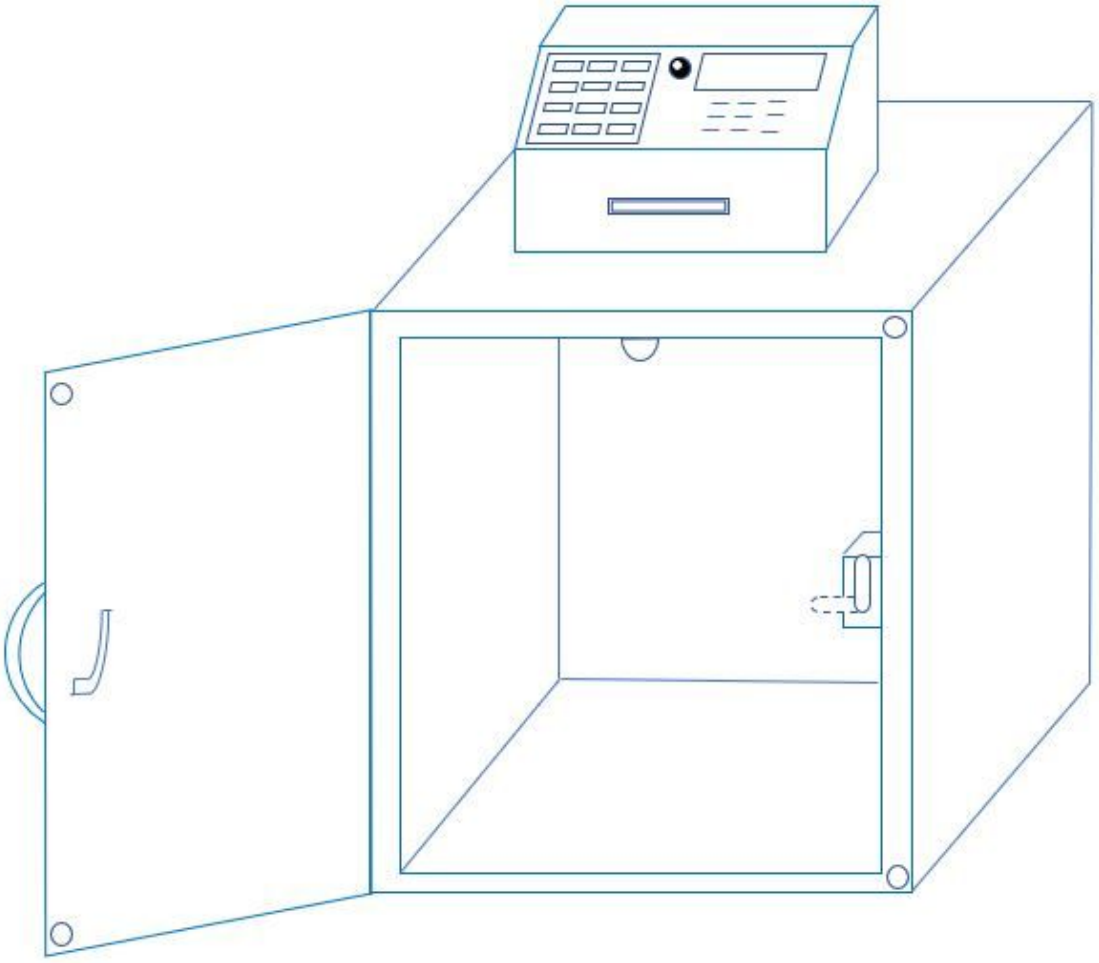

Fig. 2 Physical Design of the Locker

2.3 Power Supply

The power supply is necessary to keep all electronics of the locker work steadily and continually.

2.3.1 4x AA alkaline battery

The AA alkaline battery (1.5 V) is a typical choice to provide power to an ATmega328P based project, which is the core of the entire project. In addition, the battery is also used to connect to a voltage regulator to provide power to other electronics such as servos, LCD display and speaker in the project. The typical 1.5 V alkaline battery has 1500 mAH of available energy. After calculation and approximation, our system draws a current of 200 mA (assume the security module is not triggered for most of the time). that means that if our system operates without sleeping, it can last about 7 hours, or 420 minutes. Assume the locker is used twice a day, and 2.5 minutes each time, the batteries can power this locker system for about 80 days.

Requirement: The batteries must provide sufficient power to all the electronics used in the project in a safe and steady manner for at least 30 days if the locker is used twice per day.

Verification:

1. Measure the voltage of each AA battery using a voltmeter to make sure it is 1.5 V.
2. Measure the current feeding to the PCB to make sure it is around 200 mA when the microcontroller is not in the sleep mode.

2.3.2 Voltage regulator

Since the maximum operating voltage for the microcontroller we chose is only 5.5 V, a voltage regulator circuit is needed to provide additional power rails. The 5 V linear regulator (7805) is mainly used to provide power to the ATmega328p microcontroller. It also provides power to other electronics such as the servo and LCD display. The 3.3 V linear regulator (LM1117T-3.3) is used to provide power to the backlight of the LCD display.

Requirement: The voltage regulator must provide 5 V ± 5% and 3.3 V ± 5% from the 4x 1.5 V AA batteries.

Verification:

1. Measure the output voltage of the 5 V linear regulator with a voltmeter to make sure the value is 5 V with a tolerance of ± 5%.
2. Measure the output voltage of the 3.3 V linear regulator with a voltmeter to make sure the value is 3.3 V with a tolerance of ± 5%.
3. Measure the temperature of the IC package with an infrared temperature sensor to make sure it is under 125 celsius degree.

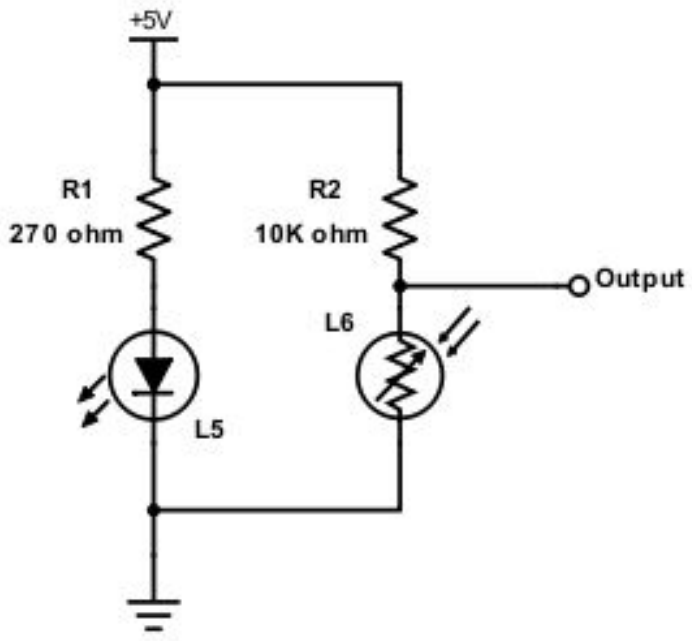

Fig. 5 940nm IR emitter/detector circuit schematic

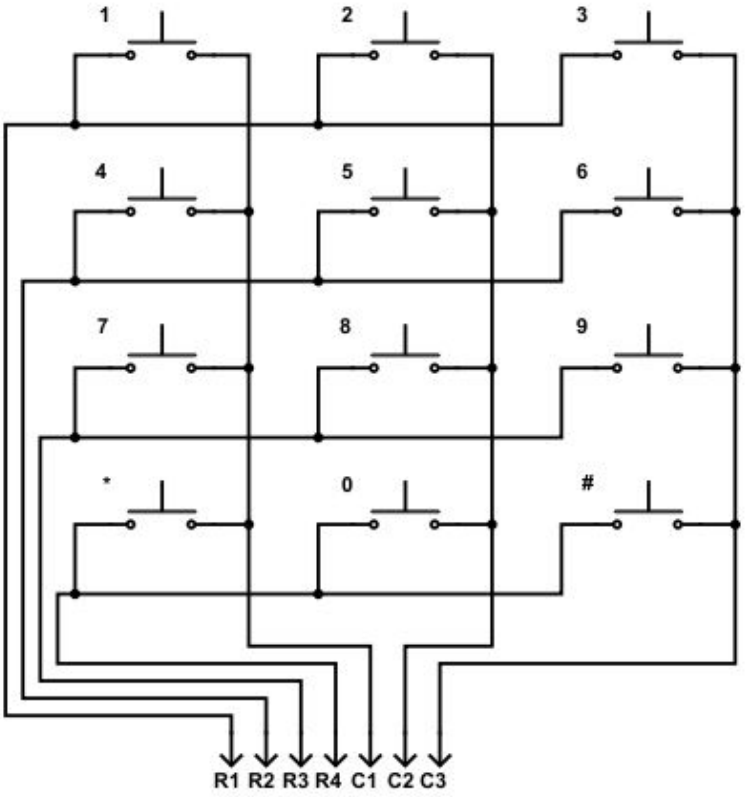

Fig. 6 4x3 Keypad circuit schematic

Table I: ATmega328p I/O Pin Assignment

Pin / Arduino Function	Assignment	Description
PD0 / Pin 0 (RX)	Not used	Serial communication
PD1 / Pin 1 (TX)	Not used	Serial communication
PD2 / Pin 2	Servo	Locker control
PD3 / Pin 3 (PWM)	Keypad	C3
PD4 / Pin 4	Keypad	C2
PD5 / Pin 5 (PWM)	Keypad	C1
PD6 / Pin 6 (PWM)	Keypad	R4
PD7 / Pin 7	Keypad	R3
PB0 / Pin 8	Keypad	R2
PB1 / Pin 9 (PWM)	Keypad	R1
PB2 / Pin 10 (PWM)	SD card breakout	CS
PB3 / Pin 11 (PWM)	SD card breakout	SCK
PB4 / Pin 12	SD card breakout	MOSI
PB5 / Pin 13	SD card breakout	MISO
PC0 / A0	TBD	-
PC1 / A1	TBD	-
PC2 / A2	IR pair	Distance detector output
PC3 / A3	Speaker	Speaker input
PC4 / A4	LCD with I2C breakout	SDA
PC5 / A5	LCD with I2C breakout	SCL

3 Ethics and Safety

3.1 Ethics

Considering the main function of our product is to keep the security of the user's package, there is not too much ethics concern in our design. The only thing to be aware of is that when the security system of the locker is triggered, the camera needs to take pictures of the possible perpetrators. This might offend the person's right in some ways. However, considering the pictures taken are only used to identify the identities of the perpetrators, the ethics issue involved is too minimal to be considered.

3.2 Safety

The general safety of our design can be guaranteed because no hazardous or volatile material is used in our design. The mechanical design of our product is also benign to the users. The only safety concern might come from the overheating of some electronic components. In order to reduce such a possibility as much as possible, an additional temperature sensor can be placed inside the control panel box (where most electronics are placed) to monitor the temperature inside the box. If the temperature goes unexpectedly high (higher than the maximum temperature rating of any component used), the power should be immediately shut off to avoid possible burning of any component.

4 Citations

[1] Circuit Basics, "HOW TO SET UP A KEYPAD ON AN ARDUINO". [Online]. Available: http://www.circuitbasics.com/how-to-set-up-a-keypad-on-an-arduino/. [Accessed: 2/10/2018]

[2] OpenHomeAutomation, "How to Run an Arduino On Battery for Years". [Online]. Available: https://openhomeautomation.net/arduino-battery. [Accessed: 2/10/2018]