POWER BOARD FOR ILLINISAT-3

ECE 445 Design Document

Project 35 - Robert Maksimowicz and Dongze Lu

Fall 2018

TA: Zhen Qin

October 15, 2018

1 Introduction

1.1 Objective

CubeSats are a class of nano satellites that use a standard size and form factor. The standard CubeSat size uses a “one unit” or “1U” measuring 10x10x10 cms and is extendable to larger sizes [1]. The development of CubeSats grew so much over the past few years that it had advanced into industry with government and academia for increasing capabilities. They now provide a low cost, effective platform for science investigators, new technology demonstrations and advanced mission concepts using constellations, swarms disaggregated systems [1]. With a rapid increase in number of CubeSats launched, there are problems associated with it. During the years of 2010-2015, there has been 187 CubeSat missions launched into orbit, from which only ~50% were successful [2]. Around 15% experienced early loss and around 23% of them were dead on arrival (DOA).

Our goal is to develop a power board that is reliable and by introducing a CAN bus as a form of communication between the subsystems in order to decentralize current bus design. The system should be as simple as absolutely possible, minimizing the points of failure. The choice of components must be utilized based on reliability, such as Dual CPU’s running in Lockstep for the microcontroller.

1.2 Background

The CubeSat program at University of Illinois at Urbana-Champaign (UIUC) is responsible for designing an IlliniSat-2, a generic picosatellite bus system. A system that is used for five CubeSat missions that UIUC is currently developing. IlliniSat-2 is a scalable CubeSat platform that handles all communication, power, command and data handling, and attitude determination and control needs for the satellite [3]. The problem with IlliniSat-2 is that it is “too centralized”. This results in longer development time for each mission due to over complicated software. Also, certain parts of the system are too fragile and too slow and the whole bus is more expensive than previously anticipated. With the launch of Laboratory for Advanced Space Systems at Illinois’ (LASSI) it is now time to develop a better bus system, IlliniSat-3. LASSI mission is to support students, faculty, and other customers utilizing small satellite resources designed, developed and tested at the University of Illinois at Urbana-Champaign. We propose to redesign the power board, which will be responsible for safe operations of CubeSat system by managing batteries as well as monitoring current consumption of the subsystem. It will also communicate between different subsystems, such as Command and Data Handling board and Altitude and Control Determination board, over the CAN bus.

1.3 High-Level Requirements

- The Power Board must control the power delivery to the other subsystems by turning on and off the hot swap controllers on board based on the power mode
- The Power Board must monitor the power delivery of the hot swap controllers for the faults in the system
- The Power Board must communicate via CAN bus with other subsystems, sending data packets such as battery capacity, temperature of the battery pack and other essential information

2 Design

The power board requires a battery pack for successful operation. The power from the battery pack is essential to the entire system, and power board ensures that it is distributed safely. Power board is responsible for turning the battery pack heaters on/off, so that the temperature range falls within 10℃ - 50℃. The board will communicate through the CAN bus with the rest of the satellite system and send messages to the Control and Data Handling (C&DH) board such as battery capacity, temperature of the battery pack and other control signals. The following diagram (Fig. 1) illustrates the top-level structure of the power board and how it interacts with other parts.

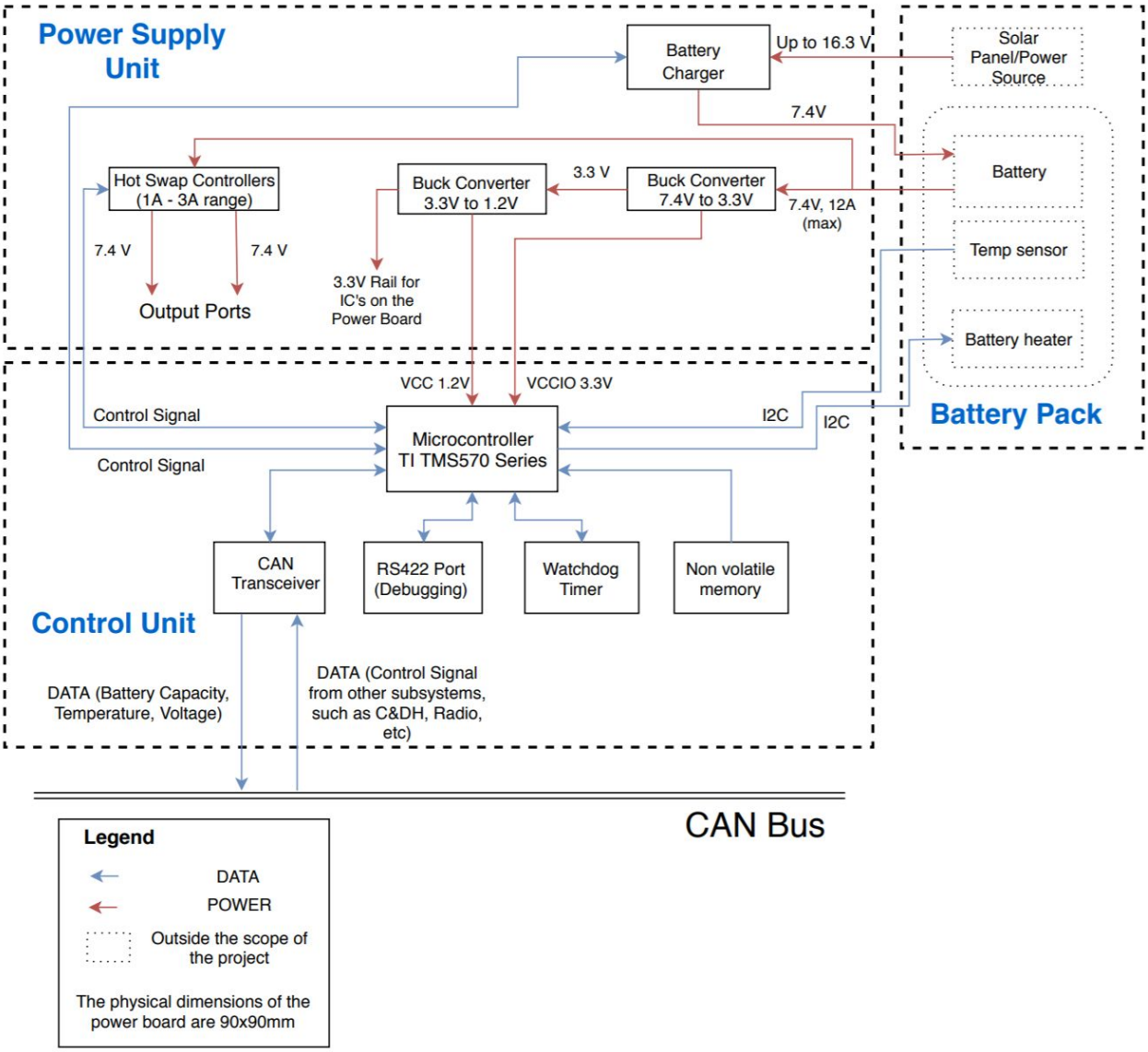

Figure 1 - Block Diagram

2.1 Power Supply

A power supply is required to keep the power board operational as well as converting the power from the battery pack to the output ports. Power from a solar panel/power source will charge a battery, which is then regulated to 1.2V and 3.3V for the rest of the system.

2.1.1 Buck Converters

There are two buck converters on the power board. One that converts 7.4V to 3.3V (Texas Instruments LM2653) for the microcontroller I/O ports as well as most of the IC chips. The other one (TPS62510) converts 3.3V to 1.2V for the microcontroller VCC.

Efficiency of a converter is defined as:

$$\eta = \frac{P_O}{P_I} = \frac{V_O I_O}{V_I I_I} \qquad \text{(Eq. 1) [16]}$$

Requirements	Verification
1. Both buck converters must achieve at least >80% efficiency 2. For 7.4V to 3.3V converter, the input voltage range should be at 7.4V ± 0.3V. The output voltage should fall between 3.3V ± 0.3V 3. For 3.3V to 1.2V converter, the input voltage range should be at 3.3V ± 0.3V. The output voltage should fall between 1.2V ±0.06V	1. Measure the efficiency of the chip on the test bench. Apply range of voltage and current from requirement 2 and 3 and measure the output power. Use Eq. 1 provided above to calculate efficiency 2. Measure the output voltage range when voltage range from requirements is applied 3. Same as above

Circuit schematic for buck converter (7.4V to 3.3V) shown in Figure 2. The values for different components have not been calculated yet.

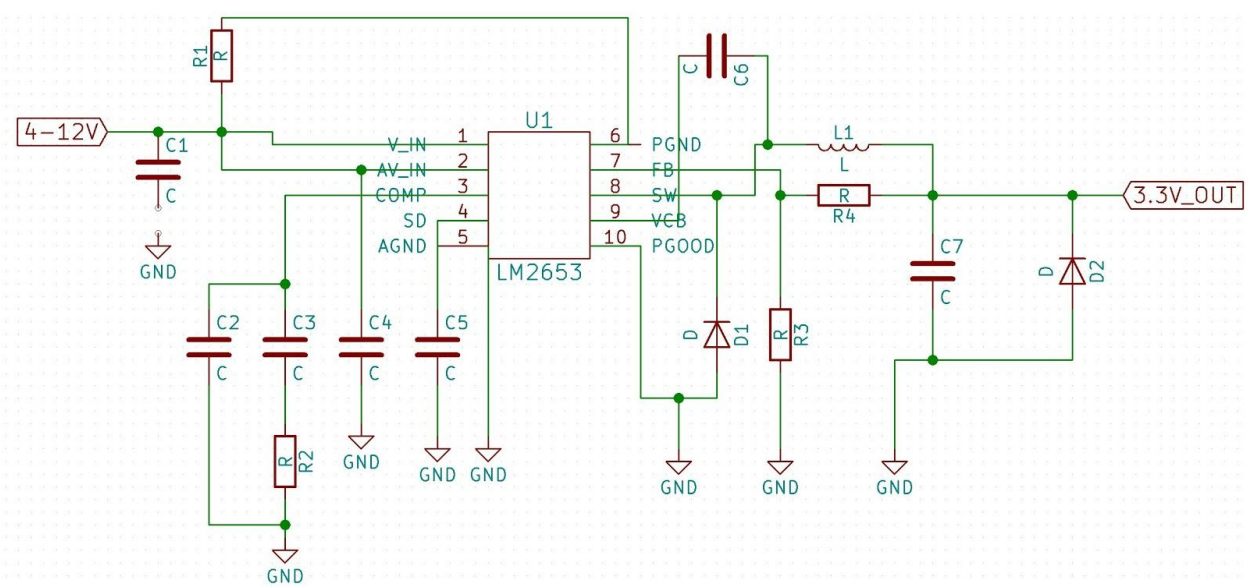

Figure 2 - Buck Converter Schematics

2.1.2 Hot Swap Controllers

Main objective of the power board is to monitor and control the power delivery to the rest of the subsystem. Hot swapping is the technique used to replace or add components without stopping or shutting down the host device. Our choice of controller is a Texas Instrument TPS2420 chip. It was chosen mainly for its wide range of operation, hardware configurable overcurrent fault protection and ability to restart the load after a fault condition. The power board consists of two hot-swap controllers, which control the power delivery to the two outputs. The outputs should be capable of delivering ~7.4V and a range from 1A to 3A to the payloads or board on the satellite system. These boards or payloads may need less than 7.4V, but it's up for them to decide, meaning that they can implement a step-down buck converter on their own without adding additional components to the power board. That way, the payloads, such as the Radio board or an experimental payload have an option to go up to ~7.4V. The range 1A - 3A for the current was chosen based on the previous mission history, no payload needed more than 3A [21]. The TPS2420 device protects loads, minimizes inrush current, and safely shuts down in the event of a fault. The programmable fault current threshold starts the fault timer while allowing the current to pass to the load uninhibited. The programmable current limit threshold sets the maximum current allowed into the load, for both inrush and severe load faults [17].

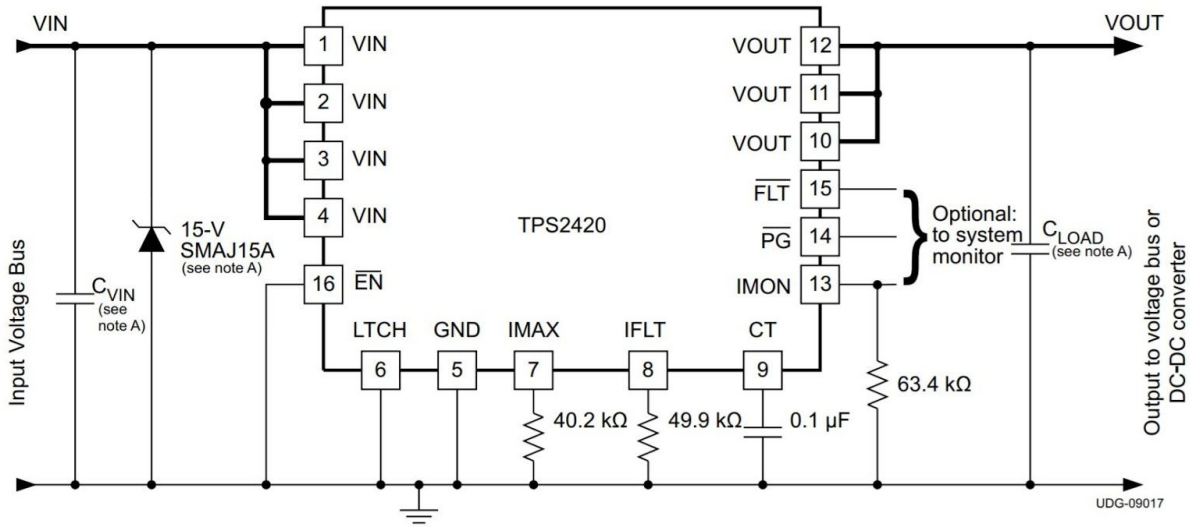

Figure 3 - Hot Swap Controller Circuit Schematic

Figure 3 shows a sample circuit schematic that shows how TPS2420 should be used. In order for the user to specify the resistors that are used at pins IFLT and IMAX. The IFLT

stands for the fault current threshold while IMAX stands for the current limit. Currents between the fault current threshold and the current-limit are permitted to flow unimpeded for the period set by the fault timer programmed on C_T. Based on the TPS2420 documentation, the values for resistors at pins IFLT and IMAX shall be calculated using equation 2 and 3. The fault timer implemented by C_T starts charing C_T when current through V_{IN} exceeds I_{FAULT}. If the current doesn't drop below the I_{FAULT} level before V_{CT} reaches its upper threshold, the output will be shut off. [17]. The input voltage to the hot swap IC is specified at 7.4 V. To calculate the output voltage from the hot swap controller we use the equation 4]. Typical design examples are shown in Figure 4. We have to keep in mind that I_{MAX} must be set sufficiently larger than I_{FAULT} to ensure that I_{MAX} could never be less than I_{FAULT}, even after taking tolerances into account.

$$R_{IFLT} = \frac{200k\Omega}{I_{FAULT}} \quad \text{(Eq. 2) [17]}$$

$$R_{IMAX} = \frac{201k\Omega}{I_{MAX}} \quad \text{(Eq. 3) [17]}$$

$$V_{OUT} = V_{IN} - 0.04 \times I_{OUT} \quad \text{(Eq. 4) [17]}$$

I_{FAULT} (A)	R_{IFLT} (kΩ)	I_{IMAX} (A)	R_{IMAX} (kΩ)	C_{CT} (μF)	T_{FAULT} (ms)
1	200	2	100	0.022	0.86
1.5	133	2.5	80.6	0.047	1.83
2	100	3	65.5	0.1	3.89
2.5	80.6	3.5	56.2	0.22	8.56
3	65.5	4	49.9	0.47	18.28
3.5	56.2	4.5	44.2	0.68	26.45
4	49.9	5	40.2	1	38.9

Figure 4 - Typical Design Examples [17]

Requirements	Verification
1. It has to deliver the current between specified values for I_{FLT} ± 0.2A and I_{MAX} ± 0.4A 2. It has to deliver the voltage specified by equation 4, ± 0.2V	1. On the test bench, apply the voltage ~7.4V and range of current specified in the requirement. Check if the controller will shut down automatically. 2. Measure the output voltage range when voltage range from requirements is applied

2.1.3 Battery Charger

The power board converts solar panel into battery power using constant operating voltage Maximum Power Point down-regulation charging with single voltage set point. The choice for IC is the LT3652 made by Linear Technology, which is the same chip used in the previous version of the power board. LT3652 is a step down battery charger that operates over 4.95V to 32V input voltage rate. The LT3652 provides a constant-current/constant-voltage charge characteristic, with maximum charge current externally programmable up to 2A. The charger employs a 3.3V float voltage feedback reference, so any desired battery float voltage up to 14.4V can be programmed with a resistor divider. [19]. The biggest drawback of using this chip is that if one solar panel malfunctions, it will not operate at a maximum point and charging efficiency will be drastically lowered. This effect can be seen in Fig 3 below [20].

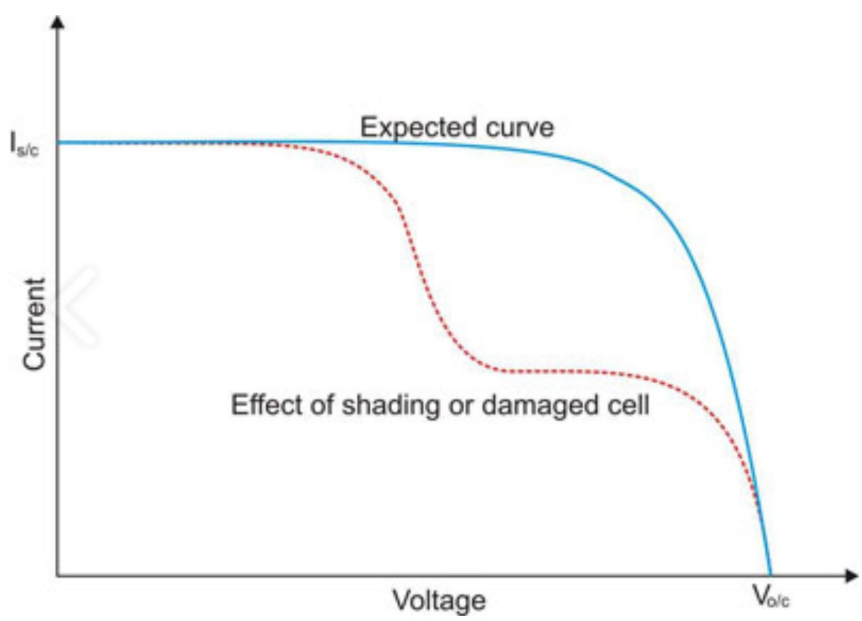

Figure 5 - IV Curve of a Solar Panel with Damaged Solar Cell

For the solar charger to turn on, the input voltage must be higher than the battery charging voltage, 7.4V.

Requirements	Validation
1. Must operate over 5V to 17V input voltage range 2. Must support maximum charge current externally programmable up to 2A	1. Measure the output power if the charger will turn on when adequate power is applied on a testbench 2. Measure current when the adequate power is applied

Battery charger circuit schematics are shown in Figure 4. The values for different components have not been calculated yet.

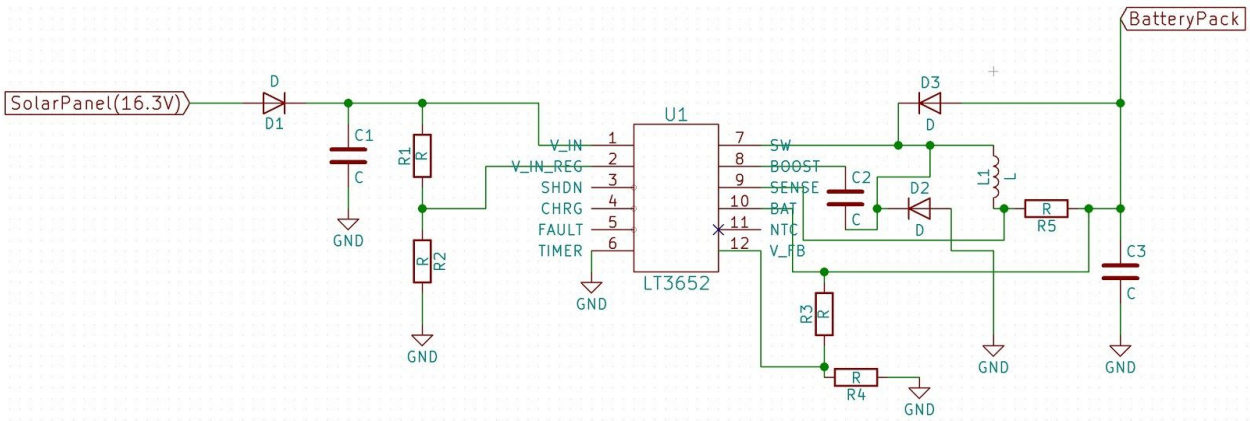

Figure 6 - Battery Charging Circuit Schematic

2.2 Control Unit

The control units controls every aspect of the power board. The brains of the control unit is the microcontroller which makes the decisions such as turning how swap controllers on/off, turning battery heaters on/off, etc.

2.2.1 Microcontroller

The microcontroller runs the software to control the initial power state of the satellite after deployment. It communicates using CAN bus with other boards, such as Control and Data Handling board to answer commands to turn on/off subsystems and payloads. The microcontroller of choice is TMS570LS1227 made by Texas Instruments. This

microcontroller was chosen for it's high performance and safety critical applications. It features detection probability of errors induced by voltage spikes or ionizing radiation [12]. It features dual CPUs running in lockstep, error signaling module with error pin and voltage and clock monitoring [9]. Software detects over current fault situation on the subsystem, and updates the battery state of charge to enter different power states.

Requirements	Verification
1. Must consume less than 360mA ± 10mA when power board is operational 2. Must be able to communicate with battery pack through Inter-Integrated Circuit (I2C) 3. Must be able to send and receive data packets on CAN bus 4. Must be able to send control signal to hot swap controllers using GPIO pins	1. Measure power consumption under normal operation (power board turned on with RTOS running) 2. Successfully receive temperature data from the battery pack and successfully able to operate (turn on/off) battery heaters 3. Successfully receive and send data packets on the CAN bus. We will set up a Raspberry Pi board with CAN bus capability and demonstrate sending/receiving data packets 4. Successfully turn on/off hot swap controllers using freeRTOS

2.2.2 Watchdog Timer

Watchdog timer is a timer that automatically generates a system reset if there's no signal from the main program [10]. Example: The main program has a loop that constantly goes through. The watchdog timer is loaded with a value greater than the worst case time delay through the main program. Each time it goes through, main program resets the timer. If the fault occurs, an interrupt is generated to reset the processor. Out watchdog timer will be connected to the TMS570LS1227 microcontroller. We've decided to choose Texas Instruments TPS3128 which features Supply Voltage Supervisor with Watchdog Timer.

Requirements	Verification
1. Must be able to communicate with microcontroller a). It has to receive a signal from the microcontroller informing it that the main loop of the program has ended before the timer on the watchdog expires (to prevent from resetting the microcontroller) b). It has to be able to send a reset signal to nRST pin on the microcontroller after the timer expires	1. a). Measure the output pin voltage on the microcontroller for the signal b). Measure the output pin voltage on the watchdog for the signal

2.2.3 Non-volatile Memory

The non-volatile memory features low power consumption, is not affected by magnetic-fields and is radiation resistant [14]. The non-volatile memory in our design serves as a reliability feature. Non-volatile memory will hold the operating code that is loaded into the microcontroller. We chose the FRAM chip for our non-volatile memory due to the fact that FRAM devices are satisfy the requirements above and are also impervious to external electric fields [14]. We chose a chip manufactured by Cypress Semiconductor a 512kB FM25V05-G.

Requirements	Verification
1. Must be able to communicate with the microcontroller	1. Verify that the microcontroller is able to load the main program from an external memory by erasing the internal memory where the main program shall reside and check if the microcontroller still functions as it should

2.2.4 CAN Transceiver

A Controller Area Network (CAN bus) is a robust vehicle bus standard designed to allow microcontrollers and devices to communicate with each other [18]. The power board will use CAN bus to communicate with other systems on a bus. We will have two CAN transceivers present for reliability purposes.

Requirements	Verification
1. Must be able to send and receive data packets on CAN bus	1. Successfully receive and send data packets on the CAN bus. We will set up a Raspberry Pi board with CAN bus capability and demonstrate sending/receiving data packets

2.2.5 RS422 Port

The RS422 is used for debugging purposes. It will connect to the microcontroller from the PC to receive the information updates about the power board.

Requirements	Verification
1. Must be able of serial communication interface for debugging the microcontroller	1. Successfully use an external JTAG pod

2.3 RTOS System (Software)

We will implements a customized real-time operating system within the microcontroller build upon the Real Time Operating System (RTOS) open source operating system. The system will store, process, and send information regarding battery pack such as battery capacity, voltage, temperature, control signal.

The operating system will read the temperature from temperature sensor in battery pack using I2C and dynamically adjusted battery pack temperature by turn on/off battery heater. Furthermore, it will reads the battery capacity, decides when to power other boards based on the required current. For example, when the battery capacity is above 50%, the power board should supply power to the Command and Data Handling (C&DH) board and power up the radio board and associated boards required to establish communication when the battery capacity is above 75%.

The RTOS system will create logs for battery capacity and battery temperature. The data would be stored within the microcontroller memory and send to C&DH board through CAN bus. We want to aware the history of temperature/capacity changing on the ground station. This data would be eventually sent to the ground station. However, this is not within the scope of this project.

The RTOS system uses the CubeSat space protocol when communicating via CAN bus. This protocol is developed based on TCP. The RTOS system should be responsible for establishing connections to CAN bus, constructing/receiving data packets and encode/decode data sockets. The usage of Cubesat space protocol is very similar to TCP, the system will first establish a connection with other boards such as C&DH board. After the connection is established, the system will create sockets with 32-bit header and 1.1 kb data size. For files larger than a single socket, the file will be split into multiple sockets. The RTOS system should also have the functionality of a host, which means that other boards and connects to the power board and inquiring for information.
We have to ensure the system could switch between host and client, passively receiving/sending data upon request or actively ask for information.

The RTOS system we build upon have scheduling to realize the multi-threads. We need to implements the multi-processing for communication via CAN bus. There are two types of communication. Bookkeeping communication which effectively sending large block of data/log, requires no immediate feedback and no speed requirement. Control signal on the other hand are often small data packets, need immediate feedback and fast speed. These two types of communication should be able to perform simultaneously along with creating logs and performing actually power controlling/reading.

The implementation of RTOS is essential which gives the power board more flexibilities and scalability. Additional control/data gathering functionalities can be achieved through the software side in the future instead of redesigning circuitry.

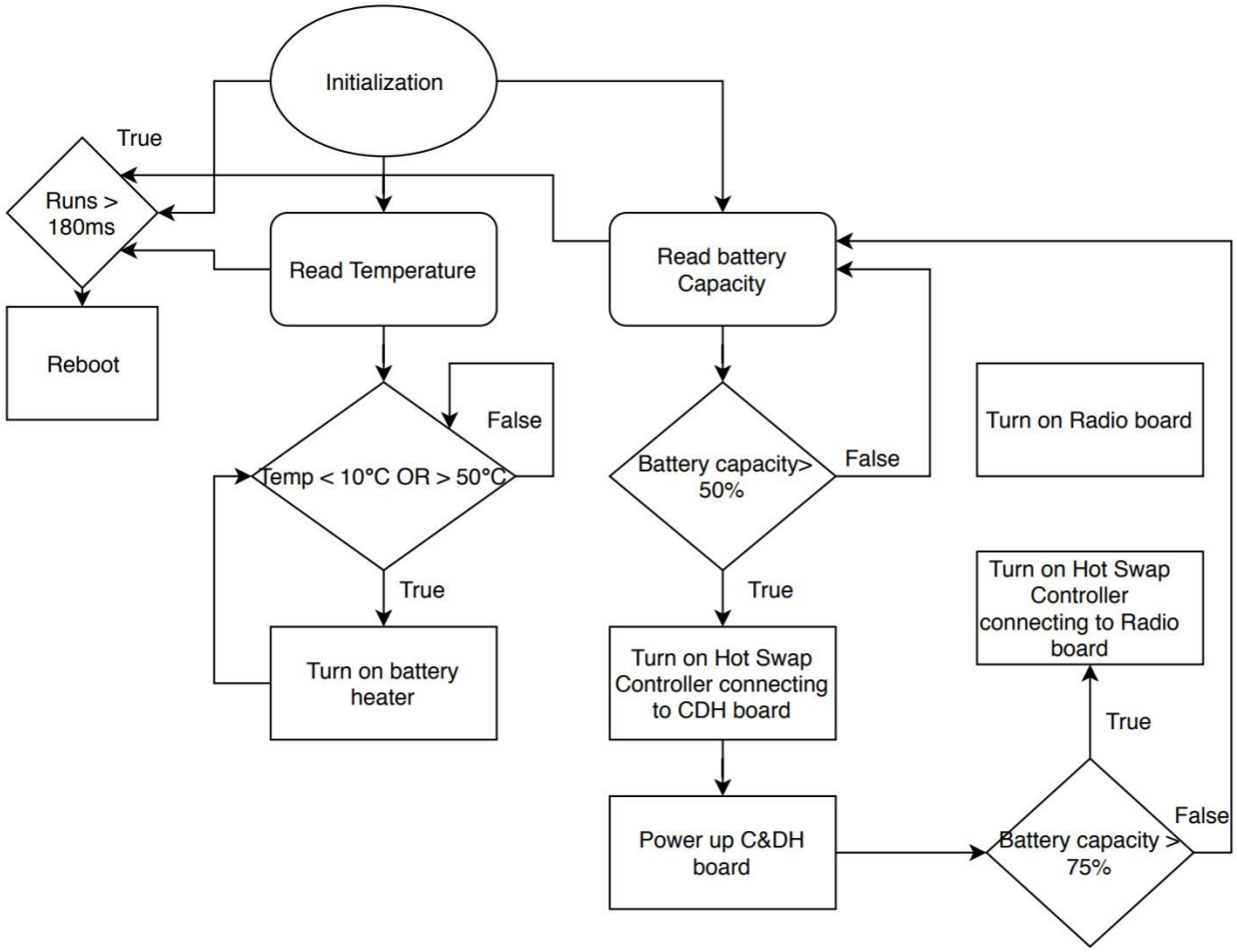

Figure 7 - RTOS Flow Diagram

2.4 Risk Analysis

In this project, we will interact with unexpected situation associating with microcontroller, power circuit and battery pack. We need to be prepared for those situation and have plan to resolve the issue. The following is a list of potential risks we will encounter when building our prototype:

1. Mismatched parts
2. Broken parts such as burned IC
3. Bugs in our microcontroller system
4. Power output could meet requirement
5. Control signal get interfered
6. Wiring issue

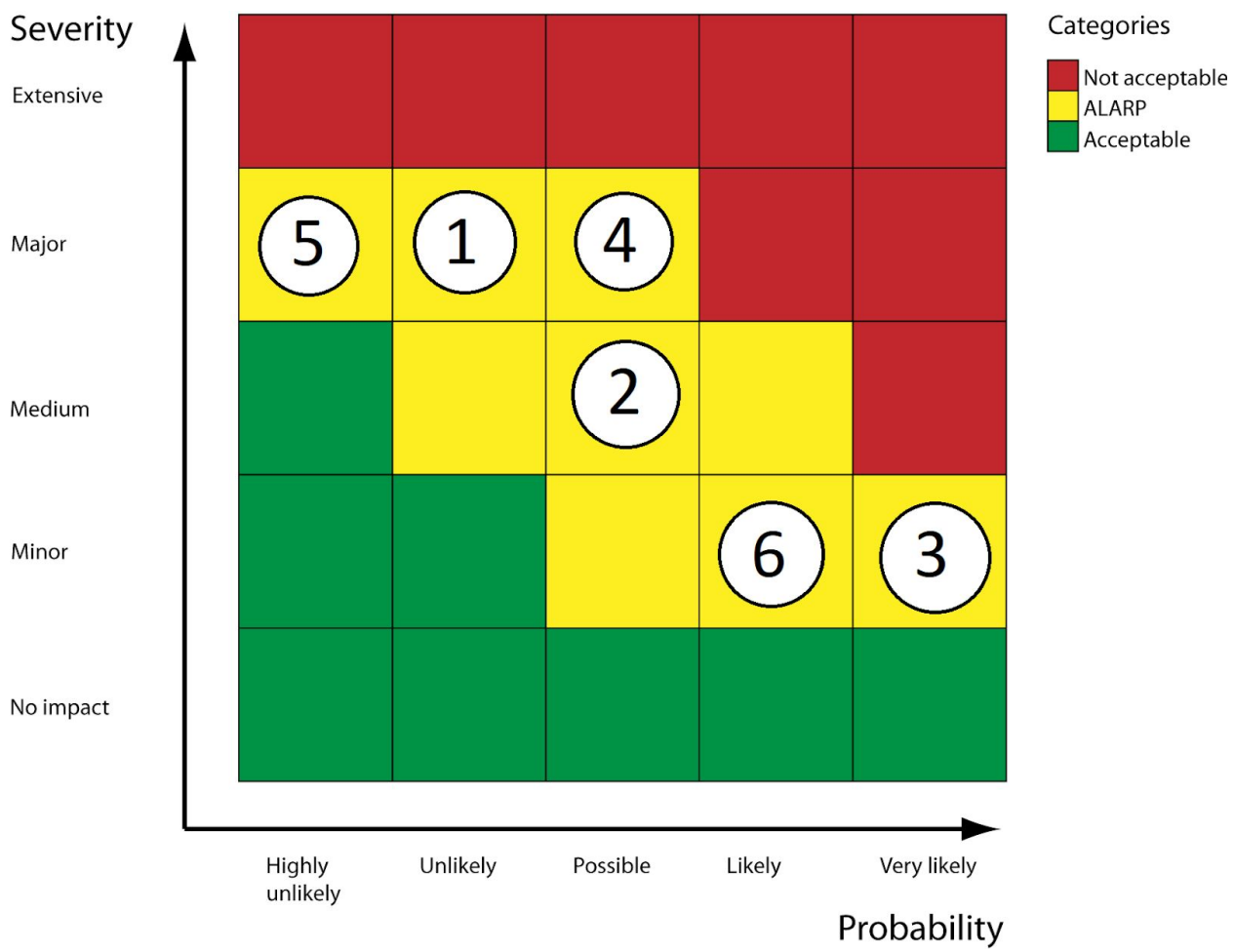

Figure 8 - Risk Assessment

The yellow regions indicates risks that we want to keep “as low as reasonably practical”.

2.5 Tolerance Analysis

In our design, the battery supplies 7.4 V, 1.2 A power to a 7.4V to 3.3V buck converter which the outputs powers the IC chips on the power board except the microcontroller. It is important to determine the tolerance of this particular buck converter because insufficient voltage would not power up the parts like watchdog timer, non-volatile memory, microcontroller (output from the 3.3V buck convert will go through a 3.3V to 1.2V buck converter in order to power the microcontroller). The non-volatile memory chip we selected requires the highest minimum input voltage, 3V. We need to make sure that the minimum output of the 7.4V to 3.3V buck converter never fall below 3V. The tolerance is lowest when outputting minimum voltage[11] which for this buck converter is 1.5V.

Ideally, the output depends on the duty cycle and input voltage.

$$V_{out} = D * V_{in}$$

In practice, the output of the buck convert depends on many factors such as maximum duty cycle, Minimum ON time, etc. The relation is depicted as the following:

$$V_{out(min)} = T_{on(ns)} * F_{s(max)} - [V_{in(max)} - I_{out(min)} * (R_{ds1} - R_{ds2}) - I_{out(min)} * (R_{ds1} + R_L)]$$

Substituting the corresponding number obtain from the datasheet of LM2653 (7.4 to 3.3V buck converter). We have the following:

$$1.66V = 350 * 10^{-9} * 345 * 10^{3} (14 - 1.55 * (0.1 - 0.1) - 1.55 * (0.1 + 0.025))$$

Hence the tolerance for the worst case is 0.16V, the tolerance is within the limitation of our desired range.

3 Cost

3.1 Labor

For newly graduated engineers, the hourly salary ranged from $30 to $60. We choose the median of this range as our hourly salary. The labor cost of designing and prototyping the power board would be calculated as the following:

2 x $45/hour x 2.5 x 10 hours/week x 16 weeks = **$36,000**

3.2 Parts

Since only one customized power board is needed, we will neglect the cost for manufacturing in large quantity.

Parts Name	Cost($)	Quantity
TI TMS570LS1227 Microcontroller	23.95	1
ADM8696 Watchdog Timer	3.58	1
LM2653 Buck Converter	3.98	1
TPS62510 Buck Converter	1.89	1
FM25V05-G Non-Volatile Memory	13.22	1
TPS2420	2.33	2

Hot-swap Controller		
SN65HVD232 CAN-bus transceiver	2.13	2
LT3652 Solar power charger	6.6	2
SN65HVD379 RS422 chip	4.14	1
Grand Total	61.82	66.28

The overall cost of is the sum of the labor and the parts cost which yields the overall cost 36072.28 USD.

4 Schedule

Week	Dongze	Robert
9/10/2018	Researching RTOS Free system Block Diagram Design	Initial Circuit Design Block Diagram Design
9/17/2018	Researching parts and ordering parts	Verify Block Diagram and Finalize parts and requirements and functionality
9/24/2018	RTOS/power tests, tools' compatibilities meet specified requirements	Design Documents
10/1/2018	Design Documents/Preparing for Design review	Design Documents/Preparing for Design review
10/8/2018	Developing System structure for Microcontroller on Development board	Implementing PCB design
10/15/2018	Programming required functionalities on	Programming required functionalities on

	Microcontroller on Development board	Microcontroller on Development board / Verify PCB design
10/22/2018	Same as last week	Same as last week
10/29/2018	Implement circuitry for power module / Implement battery module	Verify correctness of circuitry and soldering PCB board
11/5/2018	Bug Fixing microcontroller system/ In case PCB not correct, Fixing PCB design	Test basic functionalities such as controlling battery temperature of the prototype
11/12/2018	Test/Fix all functionalities associate with microcontroller	Fixing problems associating with power system.
11/19/2018 (Prototype should be finished)	Bug fixing entire system	Bug fixing entire system
11/26/2018	Prepare for presentation / Minor changes based on Mock demo feedback	Minor changes based on Mock demo feedback
12/3/2018	Prepare for presentation/final report	Prepare for presentation/final report
12/10/2018	Finish final report	Finish final report

5 Ethics and Safety

5.1 Safety

Our design will interact with lithium ion battery pack. Although the battery pack has a safety preventing mechanism such as over and under voltage protection and over current protection, we still need to be concerned with several lithium ion battery related safety issues. While storing the lithium ion battery packs, we need to assure the battery packet is away from combustible materials and within the environment with temperature between 5℃ to 20℃. These actions would prevent fire hazard relevant to the battery. We also should ensure a minimum of 50% capacity for the battery before long time storage. While using the charging or discharging the battery, we should prevent

overcharge and over discharge, limiting the voltage within 4.2 V when charging, and minimum of 3V when discharging [4]. Since our power board will be operating in outer atmosphere, temperature is a crucial safety factor to consider. The lithium ion battery charging below 0 celsius will cause damage to metallic plating, the damage to metallic plating is permanent and can cause failure of the battery when charge in high rate[8]. This is the main reason we have battery heater in our battery pack. On more concern regarding the lithium ion battery is that faulty charger would damage battery circuit protection[8]. When we test and building our power board, we need to avoid charging the battery with higher voltage than the permitted range. In our design, we plan on utilizing the DC-DC converter which will effectively regulate voltage passing from the battery pack through the power board to other integrated boards. It is important to provide adequate isolation/space for the DC-DC converter such that other parts of the system have minimum interference. Adequate isolation could protect the converter from high energy transient which most likely will damage the converter [5].

5.2 Ethics

Our design is the redesign and improvement on the old power board used in previous version of IlliniSat bus. In the new design, several integrated parts such as battery packs and battery heaters will remain unchanged. In our report and design process, we need to clearly identify the unchanged parts and give credits to their designer/author, following the ACM Code of Ethics 1.5 and IEEE Code of Ethics #7, “Respect the work required to produce new ideas…...” [7] and “.....to credit properly the contributions of others” [6]. Our work involves understanding and building upon many engineers’ work before us. It is important that we do not share their work publicly and use their work to obtain benefits without the approve from the original author. IEEE Code of Ethics #2 clearly stated, “to avoid real or perceived conflicts of interest whenever possible, and to disclose them to affected parties …...” [6]. While working on this projects, we will receive advice from professors and graduate students. It is crucial to acknowledge their advice and criticism. This practice would help our team to recognize and correct errors and mistakes quickly and effectively. According to IEEE Code of Ethics #7, “to seek, accept, and offer honest criticism of technical work, to acknowledge and correct errors…...” [6].

References

[1] NASA, ‘What are SmallSats and CubeSats?’, 2018. [Online]. Available: https://www.nasa.gov/content/what-are-smallsats-and-cubesats. [Accessed: 17-Sep-2018].

[2] Michael Swartwout, ‘University-Class Spacecraft: From Marginal Utility to Disruptive Research Platforms‘, *Saint Louis University*, 2018. [Online]. Available: https://nepp.nasa.gov/workshops/etw2016/talks/14TUE/20160614-0900-Swartwout etw2016.pdf. [Accessed: 17-Sep-2018].

[3] eoPortal Directory,’LAICE (Lower Atmosphere/Ionosphere Coupling Experiment)’, 2018. [Online]. Available: https://directory.eoportal.org/web/eoportal/satellite-missions/l/laice. [Accessed: 17-Sep-2018].

[4] University of Washington, ‘Lithium Battery Safety’, 2018. [Online]. Available: https://www.ehs.washington.edu/system/files/resources/lithium-battery-safety.pdf. [Accessed: 20-Sep-2018].

[5] Flex, ‘Market Requirements and System-Level Considerations’, 2018. [Online]. Available: https://flex.com/sites/default/files/TP018-SafetyRequirements_Flex.pdf [Accessed: 20-Sep-2018].

[6] IEEE, ‘IEEE Code of Ethics’, 2018. [Online]. Available: http://www.ieee.org/about/corporate/governance/p7-8.html. [Accessed: 20-Sep-2018].

[7] ACM, ‘ACM Code of Ethics’, 2018. [Online]. Available: https://www.acm.org/code-of-ethics [Accessed: 20-Sep-2018].

[8] Battery University, ‘Lithium-ion Safety Concerns – Battery University’, 2018. [Online]. Available: https://batteryuniversity.com/learn/archive/lithium_ion_safety_concerns [Accessed: 4-Oct- 2018].

[9] Texas Instruments, ‘TMS570LS1227 16- and 32-Bit RISC Flash Microcontroller ‘, 2018. [Online] Available: http://www.ti.com/lit/ds/symlink/tms570ls1227.pdf. [Accessed: 4-Oct-2018].

[10] Arm MBED, 'Watchdog Timer', 2018. [Online]. Available: https://os.mbed.com/cookbook/WatchDog-Timer. [Accessed: 1-Oct-2018].

[11] Tucker, J., 'Understanding output voltage limitations of DC/DC buck converters', 2018. [Online]. Available at: http://www.ti.com/lit/an/slyt293/slyt293.pdf [Accessed: 4-Oct-2018].

[12] Wikipedia, 'Lockstep (computing)', 2018. [Online]. Available: https://en.wikipedia.org/wiki/Lockstep_(computing). [Accessed: 1-Oct-2018].

[13] Texas Instruments, 'TPS3128', 2018. [Online]. Available: http://www.ti.com/product/TPS3128. [Accessed: 4-Oct-2018].

[14] Texas Instruments, 'FRAM FAQ', 2018. [Online]. Available: http://www.ti.com/pub/fram/fram_faq.html. [Accessed: 1-Oct-2018].

[15] Mouser, 'FM25V05', 2018. [Online]. Available: https://www.mouser.com/datasheet/2/100/001-84497_FM25V05_512-Kbit_64_K_8_Serial_SPI_F-RAM-477617.pdf [Accessed: 4-Oct-2018].

[16] IEEE Xplore, 'Power losses and efficiency of buck PWM DC-DC power converter', 2018. [Online]. Available: https://ieeexplore.ieee.org/document/1566330. [Accessed: 1-Oct-2018].

[17] Texas Instruments, '5-A, 20-V Integrated FET Hot-Swap Controller', 2018. [Online]. Available: http://www.ti.com/lit/ds/symlink/tps2420.pdf [Accessed: 4-Oct-2018].

[18] CSS Electronics, 'CAN bus explained', 2018. [Online]. Available: https://www.csselectronics.com/screen/page/simple-intro-to-can-bus/language/en [Accessed: 4-Oct-2018].

[19] Linear Technology, 'Power Tracking 2A Battery Charger for Solar Power', 2018. [Online]. Available: http://www.analog.com/media/en/technical-documentation/data-sheets/3652fe.pdf [Accessed: 4-Oct-2018].

[20] Seaward Group USA, 'Curve Tracing', 2018. [Online]. Available: http://www.seaward-groupusa.com/userfiles/curve-tracing.php [Accessed: 4-Oct-2018].

[21] Wang Zipeng, ‘Design of a Scalable Nano University Satellite Bus (IlliniSat-2 Bus) Command and Data Handling System and Power System’, 2018. [Online]. Available: http://hdl.handle.net/2142/101623 [Accessed: 15-Oct-2018].