SECURITY BLANKET

By

Huiyuan Liu

Yingquan Yu

Final Report for ECE 445, Senior Design, Spring 2018

TA: Dongwei Shi

01/May/2018

Project No. 66

Abstract

This project involves creating a circuit board and accompanying software framework to control a blanket. The goal was to provide a solution to protect personal items on the public spaces, in a portable and affordable manner. Our project achieved these objectives and can cover on any personal items with soft materials and provides monitoring functionality through an Android application. The finished product can monitor personal item and detect anomaly with high accuracy, has significant safety feature built in, and is ready for deployment.

Contents

1. Introduction

Research has shown that on average one person **[1]** lost 1.24 items every year and spend 2.5 **[2]** days every year trying to retrieve their items. However, less than half of those items are ever recovered, and it cost 220 dollars to replace the item. But some lost are invaluable, a lost cell phone might be remedied by purchasing a new one while the data in the lost phone will never come back. Weekly, 12,000 laptops are lost in US. Airports **[3]** along with the sensitive data in it. “I left my bag on the table close to me and my colleagues, but for a few brief seconds we were all distracted **[4]**,” says the gentleman, who shared his experience on The Guardian about his item stolen in a restaurant.

The purpose of this project is to eliminate the situation described above and provides a portable and affordable solution to protect personal items in public spaces. Specifically, our solution utilizes a soft cover embedded with sensors and Wi-Fi module for long-range monitoring capability. User could set up the cover through an Android application and monitor his personal items from any distances.

All project goals have been realized. Both the hardware and software components were tested and are fully operational. A detailed description of our engineering approach and results are given in this paper.

2 Design

2.1 Block Diagram

On the hardware side, our project requires five modules for complete operation. Figure 1 shows the various sub-components of our designs. The hardware components on the cover includes a power supply module, a control module, a sensor group module, a Bluetooth module and a Wi-Fi module. The software components include an Android application and a centralized server for sensor data collection and transmission. Together, these various subsystems form the basis for our work. These blocks are examined in detail as independent parts sections, each with their own requirements, verification procedures, and engineering design choices.

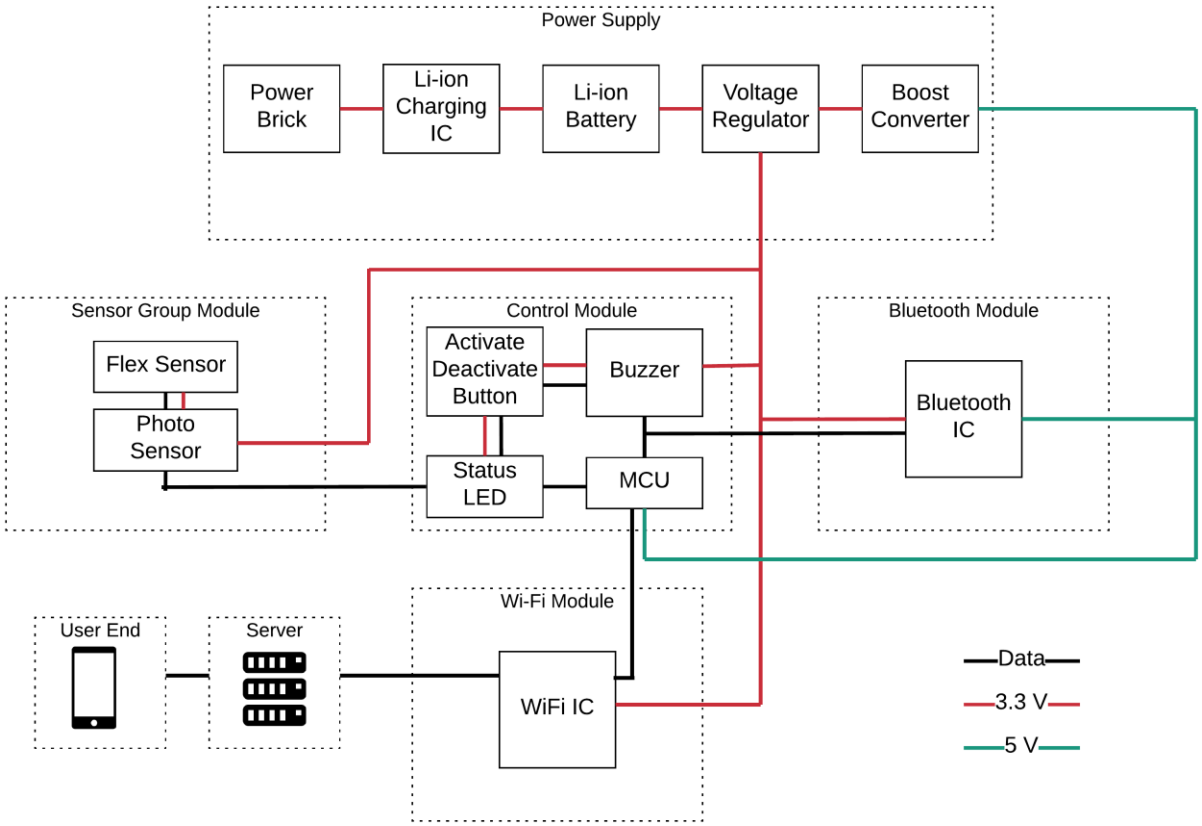

Figure 1

2.2 Power Supply

2.2.1 Li-ion Charging IC (Integrated Circuit)

The charging IC we use is BQ24075TRGTR. It is one of the most critical components in our design as it provides battery charging, battery discharging and temperature monitor functionality. We configured our charging IC in the design such that it could support fast charging at 5V, 1.25A with a 6.25-hour safety timer **[5]**. Because safety is the first priority when we were designing the blanket, we also configured the cut-off temperature for the charging IC such that when its temperature is above 50 °C, the charging IC will disable the system and cut off the power supply from battery. The Table 1 below shows the calculation result to support the above configuration.

Table 1 Calculation Result for 1.25 A fast-charging current, 6.25-hour safety timer and 50°C cut-off temperature charging IC configuration

Resistor	Value
R_{ISET}	710 Ω
R_{ILIM}	640 Ω
R_{TMR}	46.8 kΩ

$$R6 = \frac{\frac{V_{IN}}{V_{COLD}} - 1}{\frac{1}{R7} + \frac{1}{RCOLD}}$$

Equation 1

$$R7 = \frac{V_{IN} \times RCOLD \times RHOT \times \left[\frac{1}{V_{COLD}} - \frac{1}{V_{HOT}}\right]}{RHOT \times \left[\frac{V_{IN}}{V_{HOT}} - 1\right] - RCOLD \times \left[\frac{V_{IN}}{V_{COLD}} - 1\right]}$$

Equation 2

By using a 10kΩ NTC thermistor in the battery pack and equation 1 and 2, where:

$\mathrm{VCOLD} = 0.25\mathrm{x}\mathrm{V_{in}} = 0.25\mathrm{x}5\mathrm{V} = 1.25\mathrm{V}$

$\mathrm{RHOT} = 4.086\mathrm{k}\Omega$. which is 50°C threshold from NTC data sheet

$\mathrm{RCOLD} = 28.16\mathrm{k}\Omega$. which is 0°C threshold from NTC data sheet

$\mathrm{VHOT} = 0.125\mathrm{x}\mathrm{V_{in}} = 0.125\mathrm{x}5\mathrm{V} = 0.625\mathrm{V}$

$\mathrm{VCOLD} = 0.25\mathrm{x}\mathrm{V_{in}} = 0.25\mathrm{x}5\mathrm{V} = 1.25\mathrm{V}$

Then we can calculate $\mathrm{R6} = 19.14\mathrm{k}\Omega, \mathrm{R7} = 8.236\mathrm{k}\Omega$ from equation 1 and 2.

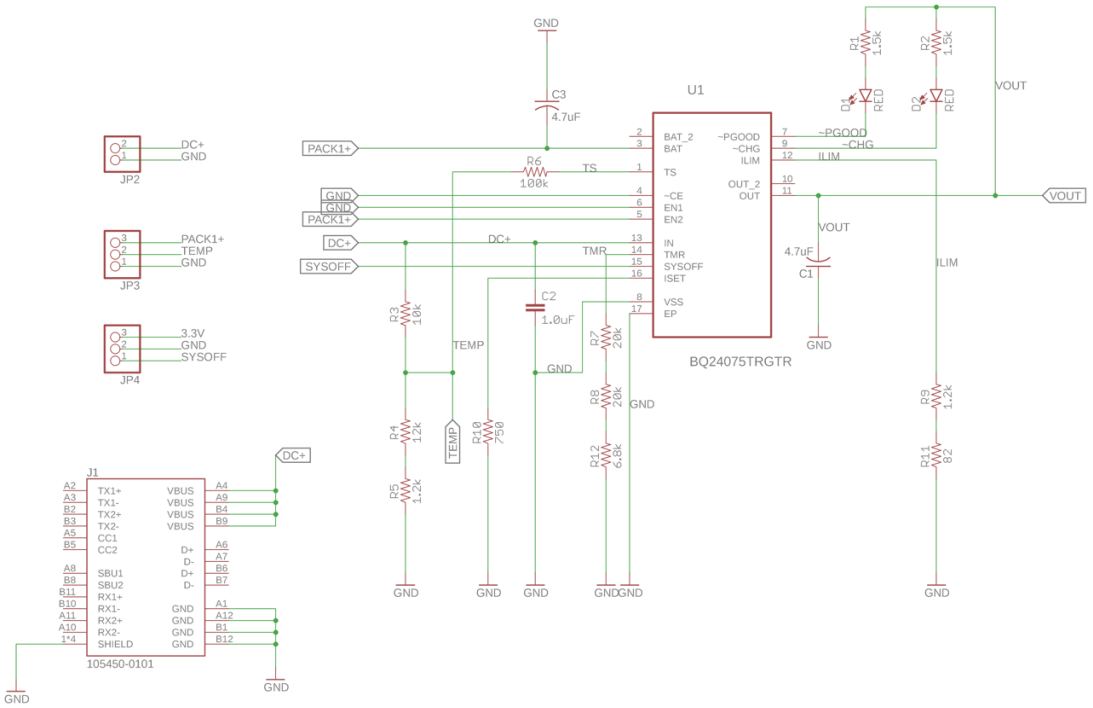

Figure 2

2.2.2 Voltage Regulator

The voltage regulator of choice is TPS75833KTTT, it is used to regulate the output voltage from charging IC to 3.3V. The maximum current draw of this chip is 3A, which is above our estimated maximum current draw of 2.5 A. **[6]** Circuit design as shown in Figure 3.

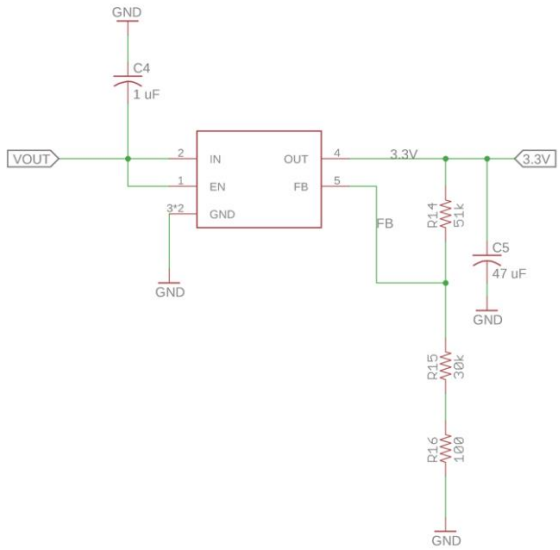

Figure 3

2.2.3 Boost Converter

The boost converter we used is FP6298. It is designed for the power input of MCU unit and the Level shifter on the Bluetooth module. It boosts up the 3.3V output from voltage regulator to 5V. In our design, we followed the design layout guideline **[7]** as indicated by Figure 6 to minimize the electromagnetic interference between power input and power output, as shown in Figure 5. Circuit design as shown in Figure 4.

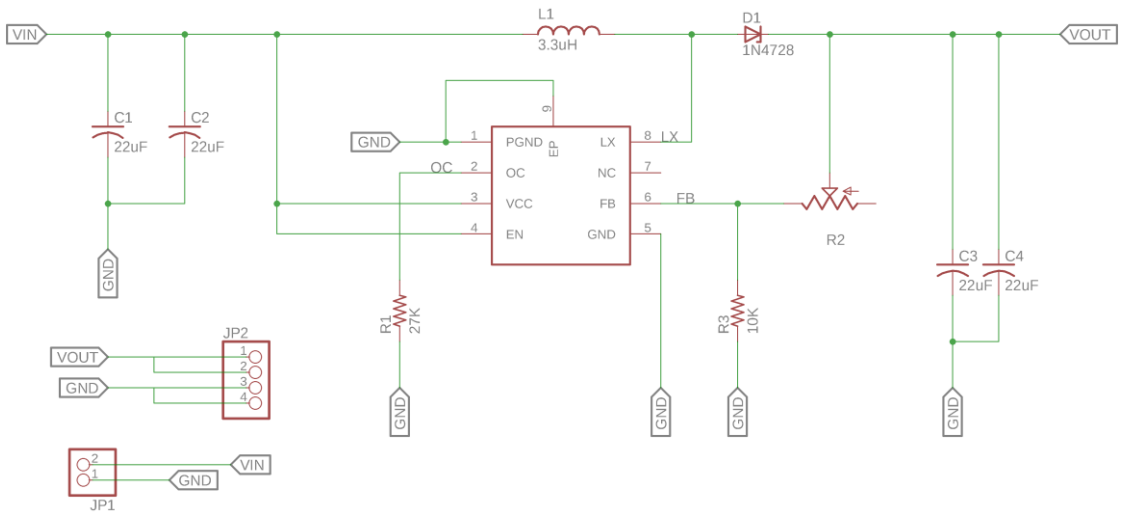

Figure 4

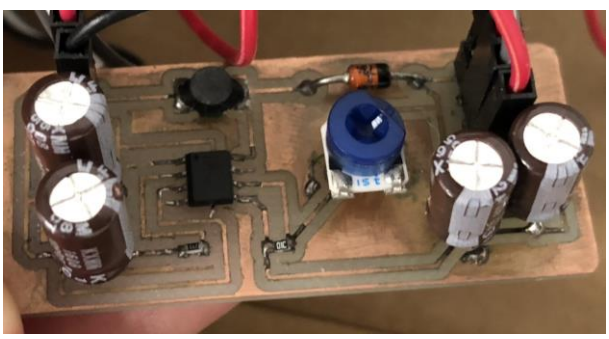

Figure 5

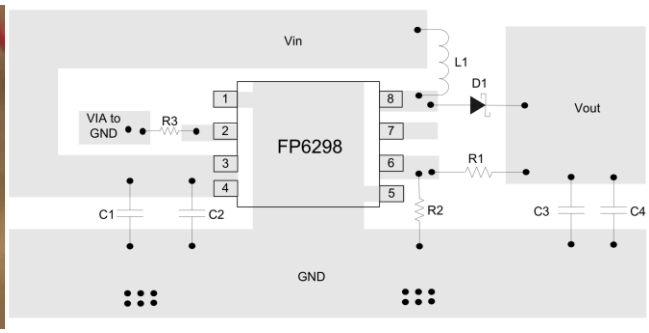

Figure 6

2.2.4 Battery

The battery of choice is a 5000mAh Li-ion Battery. We chose Li-ion battery because it has high energy density and slim profile. The battery has a temperature monitoring pin, which could be used in conjunction with the charging IC. The battery could provide a constant 2.5A current supply and a varying (4.2V to 3.3V) voltage supply based on the remaining level of the battery. Although the battery can still operate when the supplying under 3.6V, we decided to set the cut-off voltage to be 3.6V, which the risk of damaging the battery.

2.3 Control Module

2.3.1 Micro Controller Unit (MCU)

The microcontroller of choice is ATMega2560, a low cost 8-bit AVR microcontroller. The controller has many analog and digital input and support serial protocol such as I^2C, SPI and UART. **[8]** The most import protocol is UART, as it is how we communicate with our Bluetooth module and Wi-Fi module. The microcontroller also allows us to set up a serial connection over six pins for programming and debugging purposes. Additionally, the chip on the board is supported by Sparkfun and Arduino, which speeds up the design and programming process significantly.

During the initial proposal phase, we chose ATMega328p as our MCU. Because we decided to incorporate more sensors by adding extra flex sensors and also incorporate Wi-Fi module into our design, we need MCU that has more Analog to Digital (ADC) input pin and more serial input and output pin. Circuit design as shown in Figure 7.

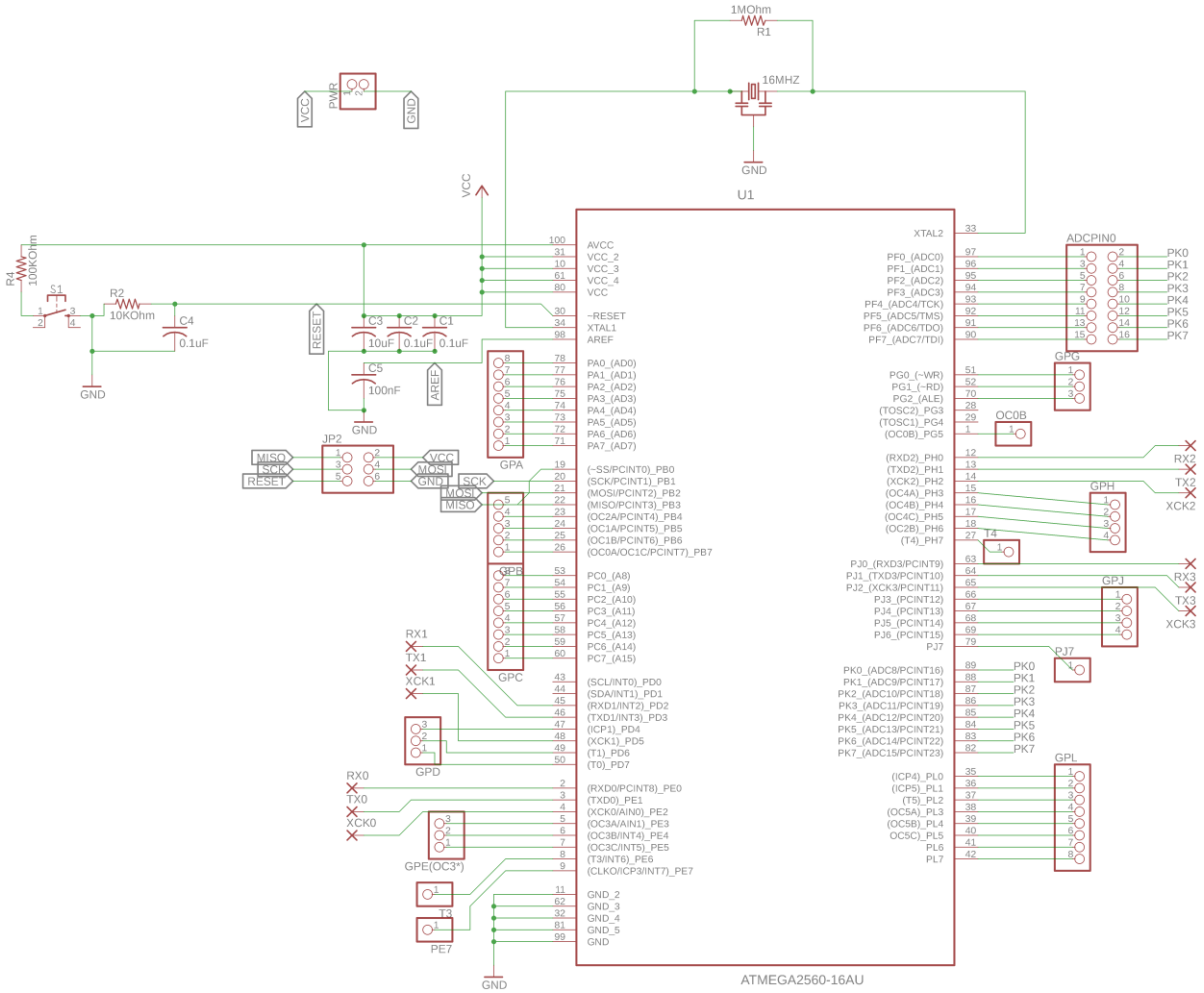

Figure 7

2.3.2 Activate/Deactivate Button

The button is used to activate or deactivate the blanket monitoring. In order to make button work properly, we also design a debounce circuit to minimize the bouncing effect when two metal plates on the button are in contact. Circuit design as shown in Figure 8.

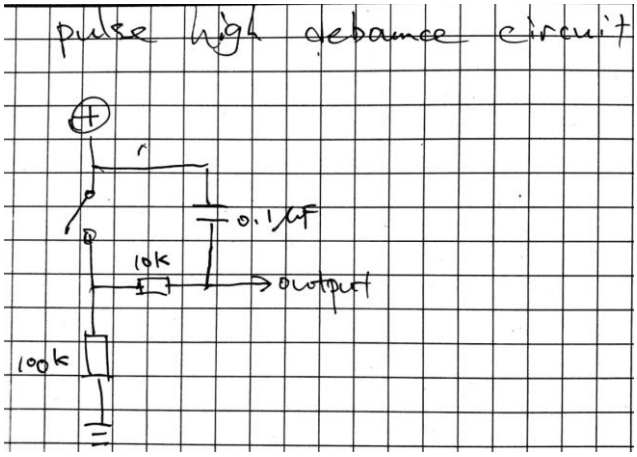

Figure 8

2.3.3 Status LED

The status LED is an indicator for the blanket status. The LED will blink three times after user press the button and then it will start the initialization process and monitoring.

2.3.4 Buzzer

The buzzer is used for alarming such that when the MCU detects the potential threat, the buzzer will produce high pitch noise or a melody to attract attention from the surrounding people. It could produce sound louder than 70 dB, which is as loud as a working vacuum cleaner.

2.4 Sensor Module

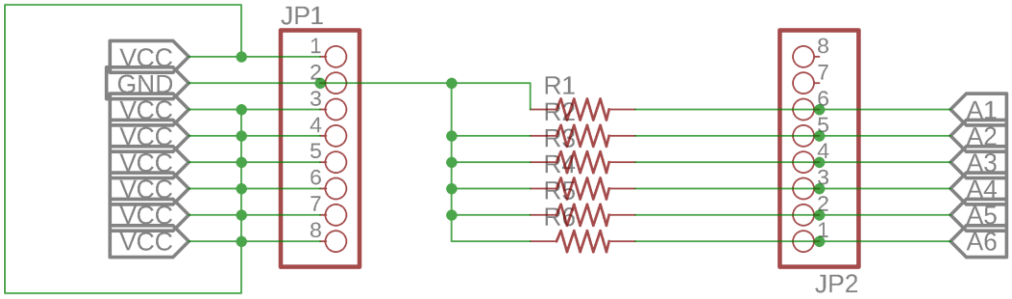

Figure 9

Figure 9 shows the circuit design of the sensor connection hub, act as a central collector to which all the sensors connect to and transfer analog data to the micro controller unit. Each sensor

connects to a pin on JP1 side, and JP2 pins which labeled A1-A6 connect to micro controller analog input pins 10-15 through flexible flat cable (FFC).

2.4.1 Flex Sensor

Flex sensors are one of the most important components in our project. It is placed on each corner of the blanket to detect the shape changes of the blanket. The flex sensor changes its resistance value up or down depends on the bending direction and its bending angle **[9]**. In general, the higher the bending angle, the greater the change of resistance. Table 2 shows the characteristic of four flex sensor we used in our project. We designed a simple voltage divider circuit to measure the resistance of the flex sensor. When its bending angle changes more than 20% comparing to the bending angle during initialization, it will trigger the alarm on the blanket.

Table 2 Resistance testing result of 4 flex sensor we use in the blanket.

Flex Sensor Model Number	Resistance (kΩ) at 0° bending	Resistance (kΩ) at 180° bending
2615-21	13.2	10.6
2615-11	13.7	10.5
1117-8	14.3	9.6
1117-23	16.0	11

2.4.2 Photo Sensor

Photo sensor are used to detect the light condition changes underneath the blanket. When more light is in contact with the photo sensor, its resistance value will decrease significantly **[10]**. We used this feature and designed a simple voltage divider circuit to measure the resistance of the photo sensor. When its resistance changes more than 20% comparing to the resistance during initialization, it will trigger the alarm on the blanket.

2.5 Wi-Fi Module

The Wi-Fi module of our choice is ESP8266, which is widely used on Internet of Things (IOT) projects. The communication between Wi-Fi module and MCU is done asynchronously using serial port. We discovered unreliable connections when setting up communication channel between MCU and Wi-Fi, such as bytes drop, high noise level, disordered bytes in receiving buffer. These unreliable behaviors corrupted the transmission message, thus impair the integrity of the message. Integrity is important in our context, since our data contains information such as sensitivity settings and sensor readings, receiving incorrectly coded packets would cause problems such as false positive or false negative reporting.

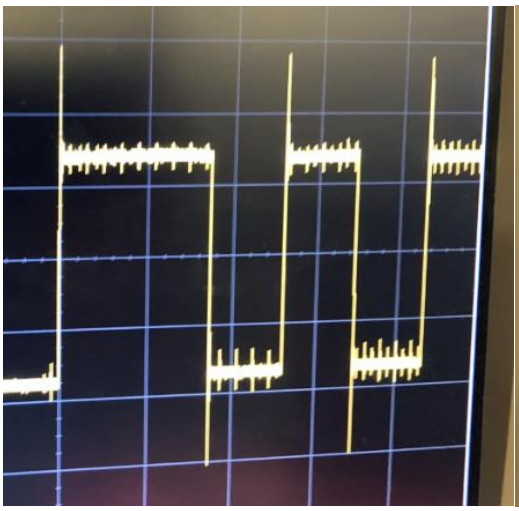

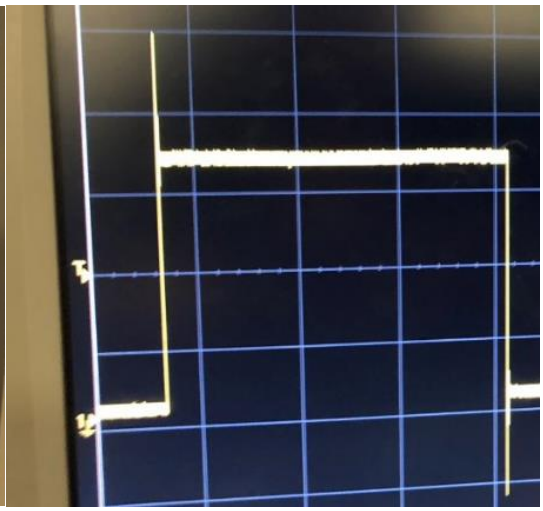

Figure 10 Example of noisy transmission **Figure 11 Example of non-noisy transmission**

Figure 10 shows an example of noisy transmission channel as opposed to Figure 11, which is a comparatively low-noise transmission.

In order to solve this issue, we designed a transmission pattern (MCU - Wi-Fi) based on standard UART transmission protocol. When transmitting a packet, additional header and trailer is added to the message packet to ensure message's integrity. After each transmission, a return message will be sent from MCU to Wi-Fi to indicate whether the last transmission is successful or not.

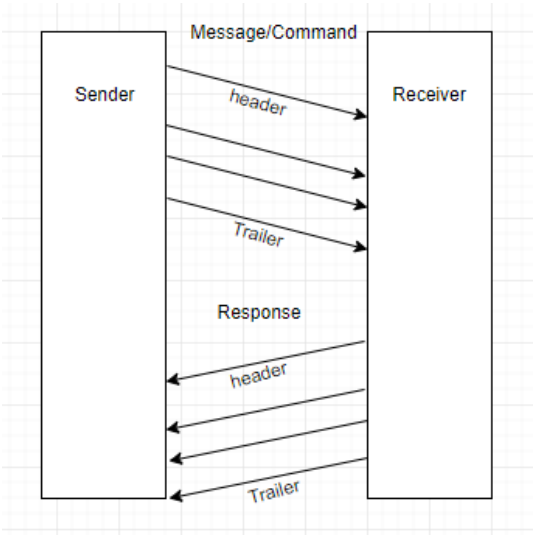

Figure 12

Figure 12 shows the theoretical model of our transmission protocol.

There are several reasons why we added Wi-Fi into our final design. Firstly, we discovered Bluetooth has a relatively low range of connectivity compare to Wi-Fi. User has to be within the range of 16 meter [11] in order to maintain the stable connection. However, with the support from Wi-Fi, user can stay

connected to the blanket from anywhere as long as internet is available. Secondly, adding Wi-Fi allows user to operate the blanket remotely. For example, user can arm and disarm the blanket remotely without being physically close to the blanket. Lastly, we could combine Wi-Fi module with a central server so that sensor data could be presented to user in real time. More advantages of using server will be covered in the later chapter.

For the communication between server and Wi-Fi module, we again used our own pattern of communication (Wi-Fi - Server) based on HTTP protocol stack. In each transmission, device names, device readings, danger score and reporting timestamp will be included and encoded. Each of these individual field is transmitted from MCU to Wi-Fi module using the protocol mentioned above, then Wi-Fi module will parse and reconstruct the data to follow Wi-Fi-Server communication packet format. After reconstruction, Wi-Fi module will push the new packet to server side. Server will return a status code for the packet received. Then Wi-Fi module will return a status code to MCU accordingly.

2.6 Bluetooth Module

The Bluetooth of choice is RN42, it is fully configurable through UART with our MCU **[12]**. The purpose of using Bluetooth module is to communicate with user Android application to transmit information such as blanket status, Wi-Fi name, Wi-Fi password and sensor sensitivity. We designed the level shifter circuit for the RTS (Request to Send) signal and Tx (Transmission) signal to work with our MCU. Figure 13 shows the schema of our Bluetooth module.

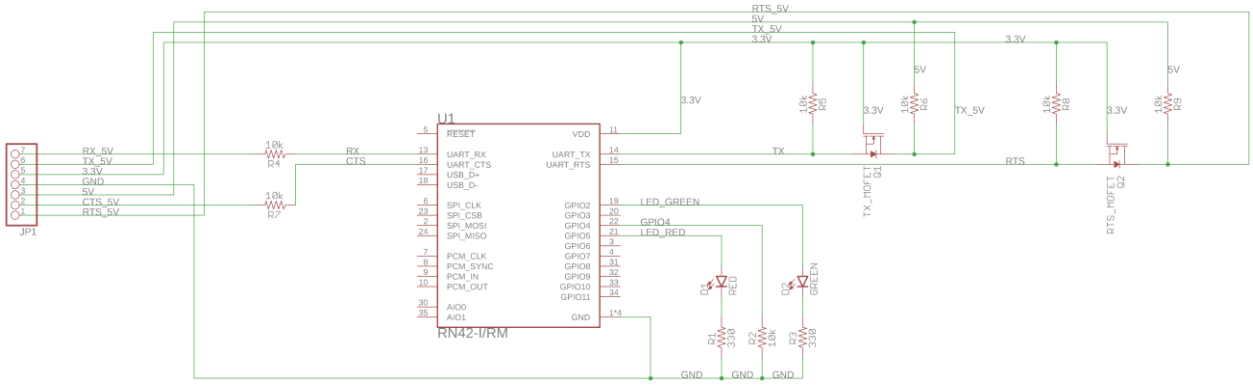

Figure 13

2.7 Android Software

The android application is designed for user to control the blanket. As in figure 14, after user's phone is paired up with the Bluetooth module on the blanket, user could adjust sensor's sensitivity and transmit the Wi-Fi information to the blanket through Bluetooth. When the blanket is connected to Wi-Fi, user will be directed to the main page of the monitoring website as shown in figure 15. In figure 16, latest sensor information that are pushed by the blanket to the server is presented to the user in real time. If the blanket detects a potential threat, the danger score will be raised and marked as red color, as shown in figure 17.

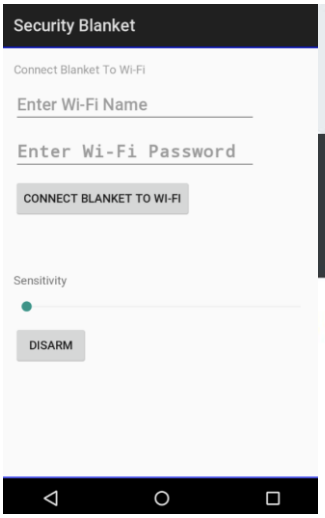

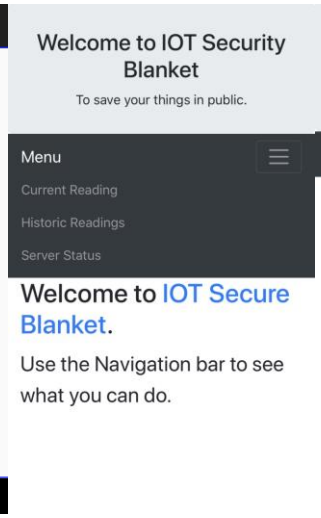

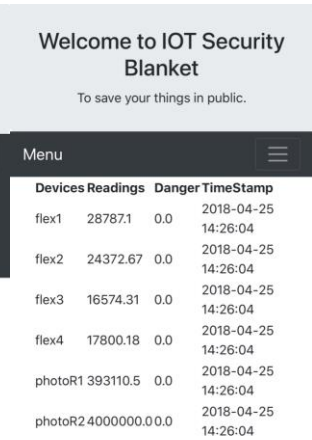

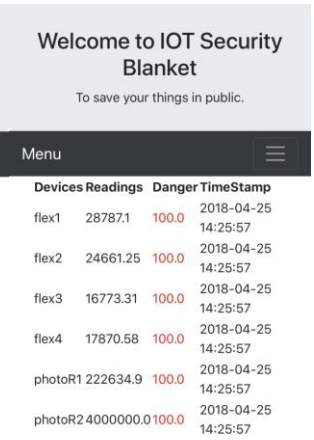

Figure 14 **Figure 15** **Figure 16** **Figure 17**

2.8 Server Software

We host our server on windows platform and implement the backend using python, which is easy for feature expansion. Server is in charge of receiving data from our blanket (referred as device below) and push the latest data reading and alert message to user. When the sensor data is transmitted by the device to server, it will parse the data according to our communication packet format. After parsing and recovering the information from the packet, server will store the information into database so that it could be referenced later. A success code will be returned if this process is completed without error. Otherwise if error occurs during this process, an error code will be returned to Wi-Fi module.

```
[('flex1', 28787.1, 100.0, '2018-04-25 14:25:57'), ('flex2', 24661.25, 100.0, '2018-04-25 14:25:57'), ('flex3', 16773.31
, 100.0, '2018-04-25 14:25:57'), ('flex4', 17870.58, 100.0, '2018-04-25 14:25:57'), ('photoR1', 222634.9, 100.0, '2018-0
4-25 14:25:57'), ('photoR2', 4000000.0, 100.0, '2018-04-25 14:25:57')]
<Response 242 bytes [200 OK]>
```

Figure 18

Figure 18 shows an example of information retrieved from a packet and corresponding success code is returned.

	id	device	reading	alarmed	danger	timestamp
	Filter	Filter	Filter	Filter	Filter	Filter
1	27807	flex1	28787.1	0	100	2018-04-25 14:25:57
2	27808	flex2	24661.25	0	100	2018-04-25 14:25:57
3	27809	flex3	16773.31	0	100	2018-04-25 14:25:57
4	27810	flex4	17870.58	0	100	2018-04-25 14:25:57
5	27811	photoR1	222634.9	0	100	2018-04-25 14:25:57
6	27812	photoR2	4000000.0	0	100	2018-04-25 14:25:57

Figure 19

Figure 19 shows an example of information retrieved from a packet stored into database.

We designed our server and database schema carefully such that neither migration nor code modification is needed when adding new sensors to the blanket. Also, we used modular design in our server code to achieve a high maintainability and high expansibility.

3. Design Verification

3.1 Power block

3.1.1 Battery

We tested battery charging and discharging by two experiments in order to ensure our blanket can operate safely on this battery. Figure 20 shows the battery discharge voltage curve when we put it the under a constant 2A load. The voltage stopped dropping when it reached the cut-off voltage of 3.6V. Figure 21 shows the battery charging curve when we configured the charging IC to support 1.25 A fast-charging. As we can see the current stays constant 1.25A in the first charging phase, during which battery is rapidly charged to around 70% by rising charging voltage, then the rest 30% will be charged slowly by using a constant voltage and decreasing current **[13].**

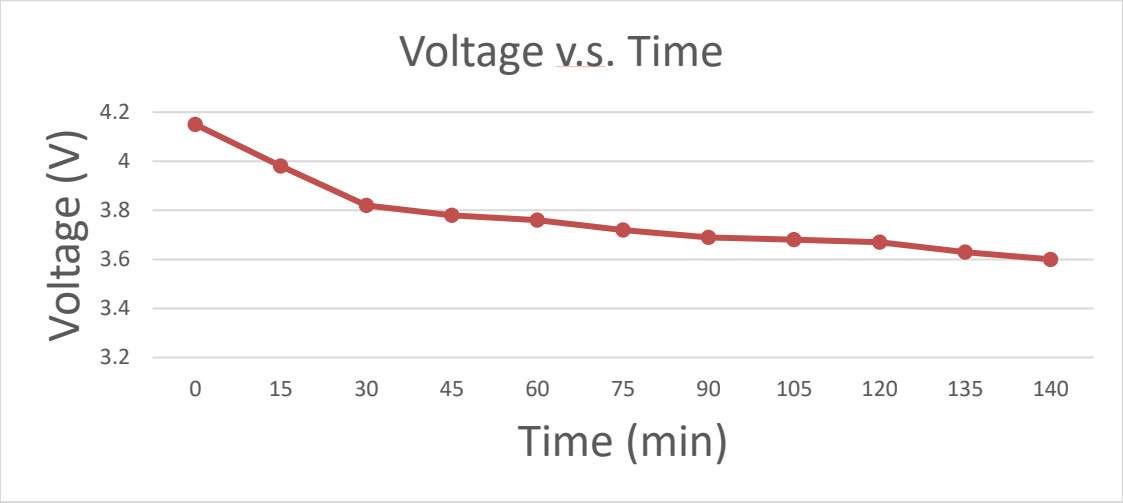

Figure 20

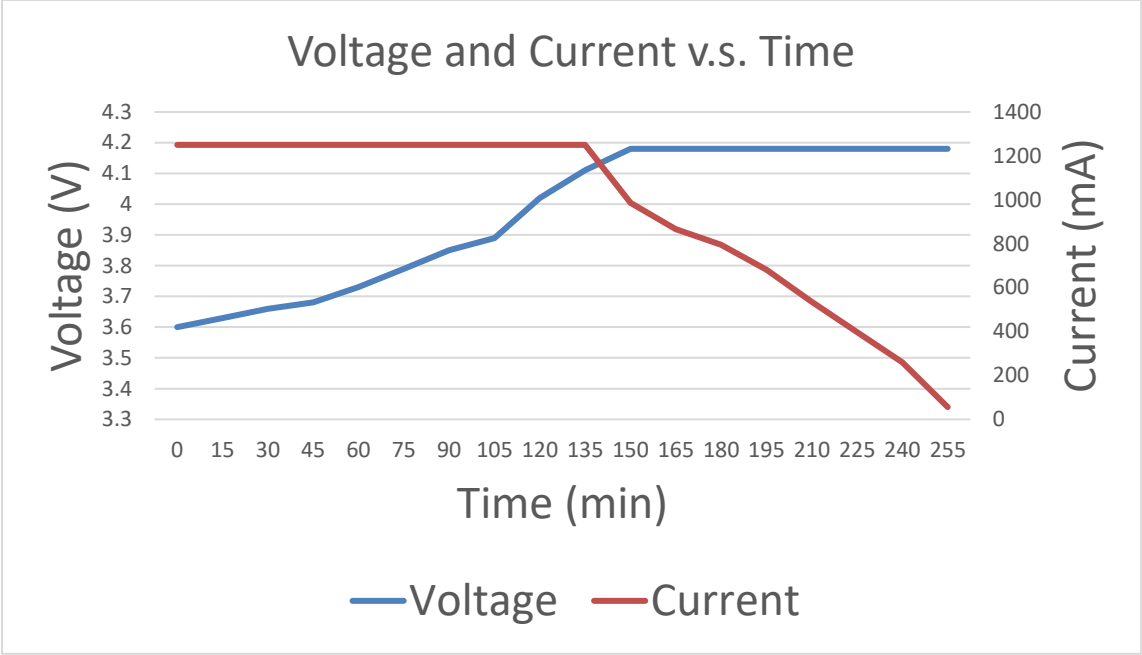

Figure 21

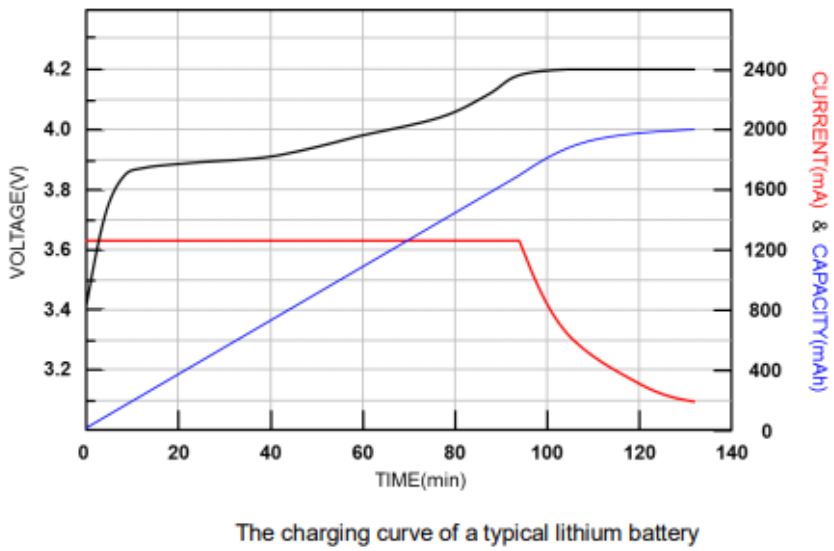

Figure 22

Figure 22 shows a typical lithium battery charging curve whose curve trend and slope meet our testing result [14].

After testing battery charging and discharging behavior, we also need to test how long battery can operate under our blanket load.

Among all the modules in this project, Bluetooth and Wi-Fi module is the one with the highest power consumption, which will consume 40mA **[11]** and 170mA **[15]** separately on average under maximum TX rate. Also, according to the data sheet, ATMega2560 will consume 10mA when 5v power is provided **[8]**

Considering sensors in the circuit: the flex sensor has minimum of $11 \pm 2k\Omega$ resistance under measurements, which, if directly connected to the circuit, will consume

$$P = \frac{U^2}{R}$$

Equation 3

By equation 3, we can have: P = $\frac{5V^2}{11 \pm 2\ k\Omega} = 2.273 \sim 2.778\ mW$

of energy. This is equivalent to have power consumption $2.778\ mWh/hr$ and

$$\mathrm{I} = \sqrt{\frac{\mathrm{P}}{\mathrm{R}}}$$

Equation 4

By equation 4, we can have: $\frac{2.778\ mWh/hr}{5v} = 0.556\ mAh$ at maximum. As you can see the power consumption of flex sensor is around 0.43% of the Bluetooth module and this apply to another sensor we used as well. In addition, we will give 30% power flexibility to circuit in this project. After calculation, the circuit demands approximately 300mAh, and with the requirement that the circuit should stay up for 12 hours without recharge. We perform test on battery based on the calculation above: use a constant 300mA load on the battery, the initial voltage of the battery is measured as 4.15V, set the cut-off voltage to be 3.6V as mentioned above, the voltage after 12h is 3.72 V, which is higher than our cut-off voltage, thus meet our high-level requirement. The time recorded when cutting off voltage is reached is 15h 43min, which again, exceeds our requirement.

3.1.2 Voltage Regulator

Voltage regulator an essential component in the power module, we put the voltage regulator under voltage range from 3.6V to 4.25V, so that we could simulate the voltage input from the battery.

Figure 23

Figure 23 shows the voltage output of the voltage regulator when a 3.7V source is connected.

We verified that output from the voltage regulator meets our requirement by measuring the output of the regulator is actually 3.3V±0.05V.

3.1.3 Boost Converter

We tested the boost converter by connecting the input to 3.3V DC generator and measure the voltage output.

Figure 24

Figure 24 shows the voltage output of the boost converter, which meets our requirement.

3.2 Bluetooth

We tested the Bluetooth to check if it meets the communication rate. We connected the Bluetooth chip to user device, then send timestamp, followed by 200 kb of data, followed by another timestamp. Calculate the time used by subtracting two timestamps, use equation 5:

$$throughtput = \frac{200\ kb}{endTime - startTime}\ (kbps)$$

Equation 5

We get the uplink throughput is 139.86 kbps, downlink throughput is 161.29 kbps. Which meets our requirement.

3.3 Wi-Fi

We tested the using same testing method as Bluetooth. We connected the Wi-Fi chip to user device, then send timestamp, followed by 1 Mb of data, followed by another timestamp. Calculate the time used by subtracting two timestamps, use equation 6:

$$throughtput = \frac{1\ Mb}{endTime - startTime}\ (Mbps)$$

Equation 6

We get the uplink throughput is 7.263 Mbps, downlink throughput is 9.258 Mbps. Which meets our requirement.

3.4 MCU

We tested the MCU to see if it meets the minimum transmission speed required, we forced the MCU to continuously send 'hello' through serial port and connect the TX and RX pin to oscilloscope, we observe a periodical pattern as figure 25:

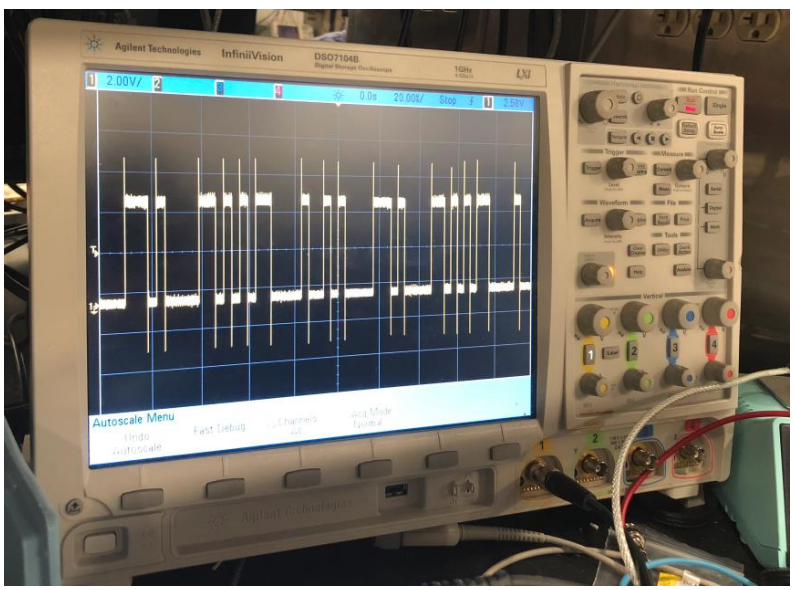

Figure 25

Here we see a transmission of 4 bits during a time span of $25\ \mu s = 2.5 * 10^{-5} s$, using equation 7:

$$throughput = \frac{bits\ transferred}{time\ span}\ bps$$

Equation 7

We get $1.6 * 10^5 bps = 160\ kbps$, which meets our requirement.

4. Costs

4.1 Parts

Table 3 Parts Costs [16]

Part	Manufacturer	Quantity	Retail Cost ($)	Bulk Purchase Cost ($)	Actual Cost ($)
1904-1001-1-ND	Espressif Systems	1	2.94	2.62	2.94
296-25609-1-ND	Texas Instruments	1	2.27	2.04	2.27
ATMEGA2560-16AU-ND	Atmel	1	14.22	13.04	14.22
RN42HID-I/RM-ND	Microchip Technology	1	15.73	14.38	15.73
512-BSS138L	Fairchild	1	0.22	0.15	0.22
595-TPS75833KTTT	Texas Instruments	1	6.07	5.49	6.07
81-CSTCE16M0V53-R0	Murata Electronics	1	0.46	0.343	0.46
SEN-08606	Sparkfun	4	12.95	12.95	12.95
SEN-09088	Sparkfun	2	1.5	1.5	1.5
LP606090NTC5000	ZhongShunXin	1	5	5	5
BQ24075TRGTR	Texas Instruments	1	2.27	2.04	2.27
COM-11089	Sparkfun	1	1.95	1.95	1.95
Total					**105.93**

4.2 Labor

An estimation of labor was created by assuming a $40 hourly rate for 2 engineers. This was extrapolated for 12 hours per week across 16 weeks. To compensate for unforeseen issues that acted as time sinks, a 2.5x multiplier was attributed. This brings the total labor cost to $38,400.

$$2.5 \times 40 \times 2 \times 12 \times 16 = \$38{,}400$$

Combining the labor rate with the estimated parts and PCB manufacture rate, the total project cost comes to:

$$\$38{,}400 + \$105.93 = \$38{,}505.93$$

5. Conclusion

5.1 Accomplishments

Our project successfully achieves all the software and hardware design goal. We are able to initialize the blanket and connect blanket to Wi-Fi through Bluetooth using our own application. After setting up, we are able to arm the blanket with just on press, and MCU successfully collects all the sensor data, calculates the danger score, and sends the data to user in real time. The entire process is easy to operate without any hassle, and the alarm feature is accurate.

5.2 Uncertainties

The MCU is able to handle all the data collection and transmission at 2 Hz. However, the blanket might not work as robust as we expected due to bad network environment, such as high wireless traffic congestion, poor Wi-Fi signal, high packet drop rate. This is uncontrollable by the user as it greatly depends on the network environment.

5.3 Ethical considerations

As mentioned above, our project will contain a 3.7 V lithium-ion battery. Li-ion battery is very volatile comparing to other kind of electric sources. If the battery is over charged significantly, it may lead to rapid, exothermic degradation of the electrodes **[17].** Also, if the battery is shorted, the temperature will rise significantly which leads to a thermal runaway. It is also referred to as "venting with flame". **[18]** So before we put the battery to the real product, we will test the power circuit thoroughly to ensure that the output from charging IC does not to exceed 4.20 V, which is the maximum charging voltage given by the battery's datasheet. In addition, the battery could experience thermal runaway, which continuously to degrade when the certain temperature is exceeded. To avoid this condition, the battery will be monitored with a thermal sensor, which will cutoff the power supply when battery exceeds certain temperature (50 °C **[19]).**

We believe the project will comply the IEEE Code of Ethics #5 **[20],** which improves the individual's understanding of conventional and emerging technologies, since this project benefits the society by making personal belongings safer than before. Also, MCU will operate on the sensor's data and analyze them before returning calculated result to the user, which complies the IEEE Code of Ethics #3 **[20].** If we have more time to polish this project, we can make the software over-the-air (OTA) updatable, which could fix bugs in our software design and improve the performance of the product. In this case the IEEE Code of Ethics #7 **[20]** would be applicable.

5.4 Future work

Taking this project from its current form to market necessitates a few future design changes. Most notably, a unified PCB and a robust housing for the PCB will increase the stability and portability of blanket significantly. Another thing to make user experience better is to use push-notification or live socket connection for alarming and data transmission.

References

[1] Mozy.com. (2018). *Lost & Found – Data Loss Research – Mozy*. [online] Available at: https://mozy.com/about/news/reports/lost-and-found/ [Accessed 8 Feb. 2018].

[2] Computer Science Zone. (2018). *Virtual Lost and Found - Computer Science Zone*. [online] Available at: https://www.computersciencezone.org/virtual-lost-found/ [Accessed 8 Feb. 2018].

[3] Stuart, K. (2018). *Having your laptop stolen is traumatic. Here's what I learned*. [online] the Guardian. Available at: https://www.theguardian.com/technology/2015/jan/20/laptop-stolen-what-i-learned [Accessed 8 Feb. 2018].

[4] Recovery rate of stolen property in the United States in 2016, t. (2018). *Recovery rate of stolen property in the U.S. in 2016, by type | Statistic*. [online] Statista. Available at: https://www.statista.com/statistics/252444/recovery-rate-of-stolen-property-in-the-us-by-type/ [Accessed 8 Feb. 2018].

[5] "Microelectronics International", *Texas Instrument*, 2018. [Online]. Available: http://www.ti.com/lit/ds/slus937b/slus937b.pdf. [Accessed: 03- May- 2018].

[6] T. [Slvs330F, "Fast-Transient Response, 3A, Low-Dropout Voltage Regulators (Rev. F)", 2018. [Online]. Available: http://www.ti.com/lit/ds/symlink/tps758.pdf. [Accessed: 03- May- 2018].

[7] "FP6298", 2018. [Online]. Available: http://www.feeling-tech.com.tw/km-master/ezcatfiles/cust/img/img/24/fp6298v063.pdf. [Accessed: 03- May- 2018].

[8] "ATmega2560 - 8-bit AVR Microcontrollers - Microcontrollers and Processors", Microchip.com, 2018. [Online]. Available: https://www.microchip.com/wwwproducts/en/ATmega2560. [Accessed: 03- May- 2018].

[9] "Flex Sensor", 2018. [Online]. Available: https://cdn.sparkfun.com/datasheets/Sensors/ForceFlex/FLEX%20SENSOR%20DATA%20SHEET%202014.pdf. [Accessed: 03- May- 2018].

[10] Mini Photo Cell, 2018. [Online]. Available: https://cdn.sparkfun.com/datasheets/Sensors/LightImaging/SEN-09088.pdf. [Accessed: 03- May- 2018].

[11] M. Inc., "RN42/RN42N Class 2 Bluetooth Module with EDR Support Data Sheet", 2018. [Online]. Available: https://www.mouser.com/datasheet/2/268/50002328A-1101962.pdf. [Accessed: 03- May- 2018].

[12] M. Conrad, "RN-C11 Bluetooth module", 2018. [Online]. Available: https://www.sparkfun.com/datasheets/Wireless/Bluetooth/rn-42-ds.pdf. [Accessed: 03- May- 2018].

[13] "Charging Lithium-Ion Batteries", Batteryuniversity.com, 2018. [Online]. Available: http://batteryuniversity.com/learn/article/charging_lithium_ion_batteries. [Accessed: 03- May- 2018].

[14] V. Ho, "AN024 – Sep 2014 Li-ion Battery and Gauge Introduction", 2018. [Online]. Available: https://www.richtek.com/assets/AppNote/AN024_EN/AN024.pdf. [Accessed: 03- May- 2018].

[15] "ESP8266 Data Sheet", Espressif.com, 2018. [Online]. Available: https://www.espressif.com/sites/default/files/documentation/0a-esp8266ex_datasheet_en.pdf. [Accessed: 03- May- 2018].

[16] "Mouser Electronics Europe - Electronic Components Distributor", Mouser.com, 2018. [Online]. Available: https://www.mouser.com. [Accessed: 03- May- 2018].

[17]Sfpe.org. (2018). *Lithium-Ion Battery Hazards - SFPE*. [online] Available at: http://www.sfpe.org/page/2012_Q4_2 [Accessed 8 Feb. 2018].

[18]Batteryuniversity.com. (2018). *Cite a Website - Cite This For Me*. [online] Available at: http://batteryuniversity.com/learn/archive/lithium_ion_safety_concerns [Accessed 8 Feb. 2018].

[19]Prba.org. (2018). *Cite a Website - Cite This For Me*. [online] Available at: http://www.prba.org/wp-content/uploads/Exponent_Report_for_NFPA_-_20111.pdf [Accessed 8 Feb. 2018].

[20]Ieee.org. (2018). *IEEE IEEE Code of Ethics*. [online] Available at: https://www.ieee.org/about/corporate/governance/p7-8.html [Accessed 8 Feb. 2018].

Appendix A Requirement and Verification Table

Table 4 System Requirements and Verifications

Requirement	Verification	Results
Charging IC: Current entering battery would be 1.25A ± 10% when under 4.20 ± 0.05 V (voltage increasing), then keeps 4.20 ± 0.05 V unchanged after battery reaches this voltage range (current decreasing)	1. Connect the IC with the USB charging port (input from power brick) or DC power supply. 2. Measure the output of IC when charging up the battery with oscillator, observe the pattern of the charging current and voltage, if matches the requirement.	The battery is charged at constant current when below 4.2v. The current measured using multimeter is 1.20A ± 0.05A. When the battery is charged to 4.2V, the charging current drops from 1.20A ± 0.05A to 0.3A and keeps dropping until reaches the cut-off current we set in the charging circuit 0.03A.
Battery Module: Battery stores more than 1920mAh of charge	Connect a fully charged battery (4.2±0.05V) to a constant-current discharge circuit (160 mA), after 12 hrs., measure the voltage across the battery, make sure it is larger than 3.6V (discharge voltage cut-off line)	The battery module actually has 4950mAh after testing and measurement and calculation.
Battery Module: Battery supply will be cut off at 50±5°C	Put the entire power supply circuit (battery removed) under a 50±5°C environment, measure if the charging/discharging current has been cut-off	The battery module successfully cuts down the battery supply.
Battery Module: Voltage Regulator: Provides 3.3v±5% from a 3.6 V to 4.25 V source	Connect a constant voltage supply at 3.6v and 4.25v, in both cases, connect the output of regulator to a constant-current discharge circuit (320mA), measure the output voltage to be in range 3.3v ±5%	The voltage regulator can provide 3.3v ± 0.05v voltage output.
Voltage Regulator: Can operate between 0-320 mA (having a 100% redundancy in order to make the voltage input reliable)	Connect a constant voltage supply at 3.6v and 4.25v, in both cases, connect the output of regulator to a constant-current discharge circuit(320mA), measure the output voltage to be in range 3.3v ±5%	The voltage regulator is operable until 2A.
Voltage Regulator: Battery supply will be cut off at 50 ± 5 °C	Put the entire power supply circuit (battery removed) under a 50 ± 5 °C environment, measure	The voltage regulator successfully cuts down the battery supply.

	if the charging/discharging current has been cut-off	
Boost Converter: boost converter need to convert 3.3V ± 5% input to 5V±10% output.	Connect the boost converter's input to a DC generator, begin with 3.3V * (1-5%)=3.135V, then slowly tune up the voltage output of the DC generator until 3.3V * (1+5%) = 3.465V, measure the voltage of boost converter's output during tuning up its input voltage. The converter's output should be 5V±10%.	Boost converter's output is 5±0.2V, which meets the requirement.
Bluetooth: The Bluetooth need to be able to communicate over IEEE 802.15.1 at > 100kbps.	Assemble Bluetooth module on PCB, boot on and configure as required in the datasheet provided, connected with UE device, measure the uplink/downlink speed on the device.	The firmware we wrote successfully achieve goal, the transmission rate is above 200 kbps.
Bluetooth: Need be able to communicate over UART with host.	Connect the UART port on WT11i-A with TX1, RX1 pin on the ATmega2560 chip, as well as computer. Program the chip such that when phone is connected to the chip, the measurement from the sensors can be read through phone in 1/10s scale.	The firmware we wrote successfully achieve goal.
Button: Button must be denounced	Connect the button to the oscillator press and release the button and observe the waveform, make sure the waveform doesn't have oscillations when switching between low and high.	The button is debounced.
Button: Must be easily-pressible	Press the button and ensure that it can be done without strain	The button is easily pressible
Buzzer: Must be able to reproduce sound louder than 70 db.	1. Connect buzzer to function generator with output signal of peak amplitude 5V, 1kHz sine wave. 2. Measure the loudness of the speaker from 0.1m away using any mobile phone software. 3. Ensure the loudness is at least 70 db.	The buzzer is 72db at max strength based on the resistor we choose.

Micro controller: Can both receive and transmit over UART at a speed of 100 kbps.	1. Connect microcontroller to USB UART bridge, such as FT4222, and to a terminal such as Putty. 2. Set up terminal speed at 100 kbaud. 3. Send and echo back 100 characters. 4. Ensure that all character matches.	The MCU is functional, UART speed is 115.2 kbps.
Flex sensor: Maximum 1 W of peak power consumption.	Connect the flex sensor to 5v voltage supply, measure the impedance of the flex sensor while it's flat, then use $\mathrm{P} = \frac{U^2}{R}$ to calculate the power consumption.	The hardware meets the requirements we set.
Flex sensor: Minimum range of change should be 15%	Same as above, but measure the impedances both at flat and fully bent (~180°), then calculate the ratio of difference using formula $\mathrm{Diff} = \left(\frac{R_{0^\circ}}{R_{180^\circ}} - 1\right) * 100\%$	The hardware meets the requirements we set.
Photo Sensor: The sensor must have resistance value between 8k Ohm to 20k Ohm under normal light condition	1. Assemble the circuit shown in figure 2. Measure the voltage across the resistor through analog input on pin A0 and calculate the resistance of photo sensor. 3. Ensure the resistance range of photo sensor is between 8 to 20k Ohm.	The hardware meets the requirements we set.
Wi-Fi Module: The Wi-Fi need to be able to communicate over IEEE 802.11n at > 100kbps and setup stabilized socket connection with server.	Assemble Wi-Fi module on PCB, boot on and program the firmware driver we wrote, which sets up the socket with the server and maintain the socket until voluntarily disconnect. The driver will parse and post the data get from the UART line, as well as get commands from server.	The firmware we wrote successfully achieve goal, the transmission rate is above 500 kbps.

Wi-Fi Module: Need be able to communicate over UART with host.	Connect the UART port on Wi-Fi chip with TX2, RX2 pin on the ATmega2560 chip, as well as computer. Program the chip such that when phone is connected to the chip, the measurement from the sensors can be read through phone in 1/10s scale.	The firmware we wrote successfully achieve goal.