Portable Bluetooth Amp

Group 53 – Anthony Pham, Nicholas Jew, Austin Palanca

ECE 445 – Spring 2018: Final Presentation
May 1, 2018 4:00pm

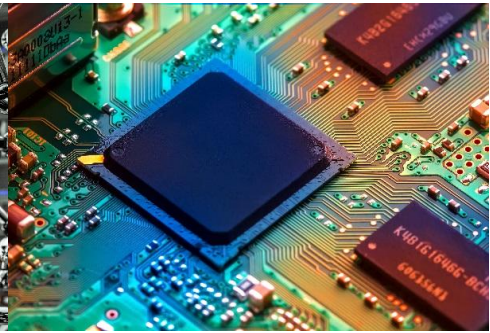

ECE ILLINOIS

ILLINOIS

The Problem

- Lack of loud and clear bluetooth speakers
- No Portable Amplifiers on the Market

Image Source: Amazon.com[1]

Our Solution

- Reuse existing speakers at home
- Multipurpose amp for home and external use

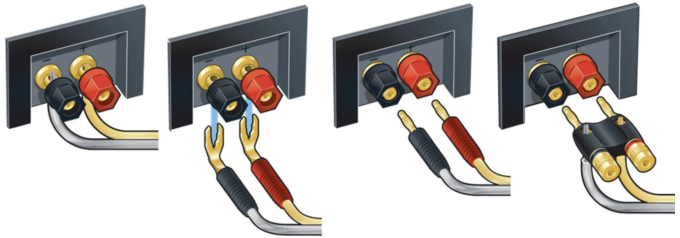

Image Source: Crutchfield[2]

Objective

- Portable (fits in a backpack)
- At least 3-hour battery life
- Provide 20 watts of power
- Bluetooth and Analog Connectivity

Physical Design - 3D CAD Model

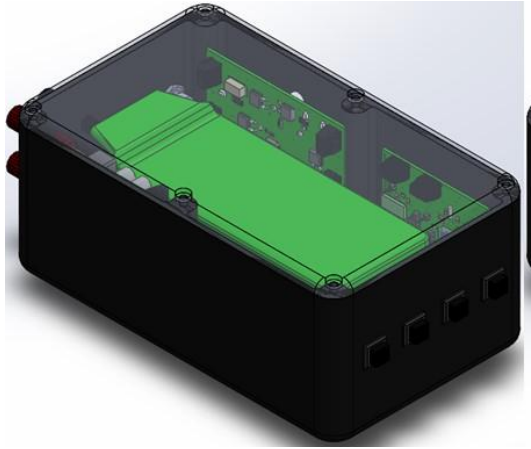

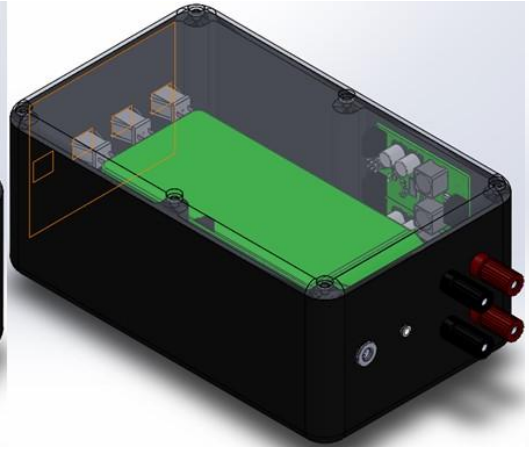

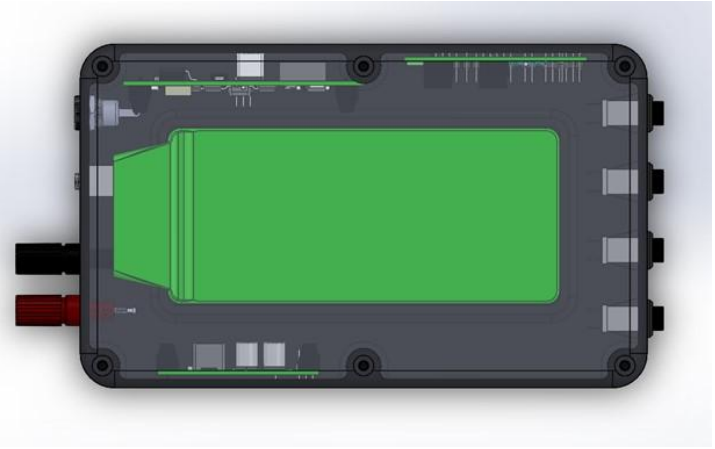

Overall Dimensions (including plugs/buttons): 9.5in x 5in x 3.5in

Physical Design - Final Device

3D-Printed ABS Plastic Enclosure

High-Level Block Diagram

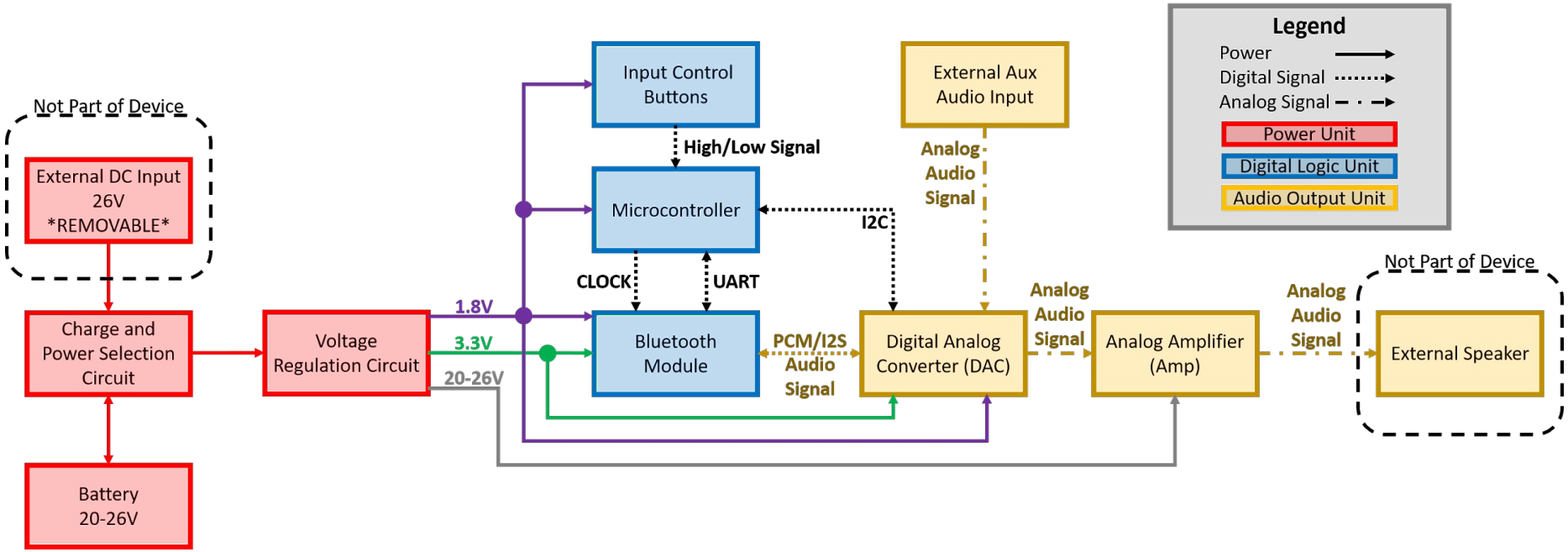

Power Unit

Supplies all necessary power to the system

Power Unit

- Inputs
  - Internal Lithium Polymer 6-Cell Battery (25.2VDC)
  - Removable External DC Power Supply (26VDC)
- Outputs
  - 2A @ 20-26VDC
  - 2A @ 3.3VDC
  - 0.5A @ 1.8VDC

Power Unit - Design Development

- Ability to automatically switch between battery and external supply
- Unit is independent from the rest of the system
  - Allows for testing without the need for the other units in the device

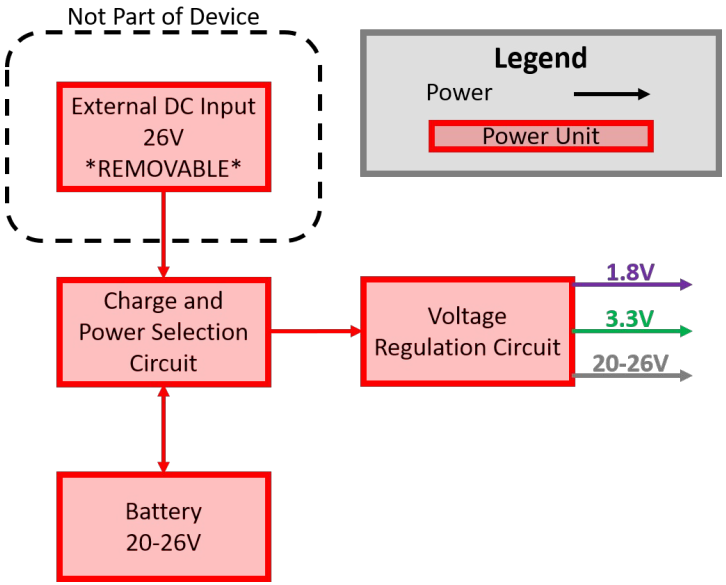

Power Unit - Final Design

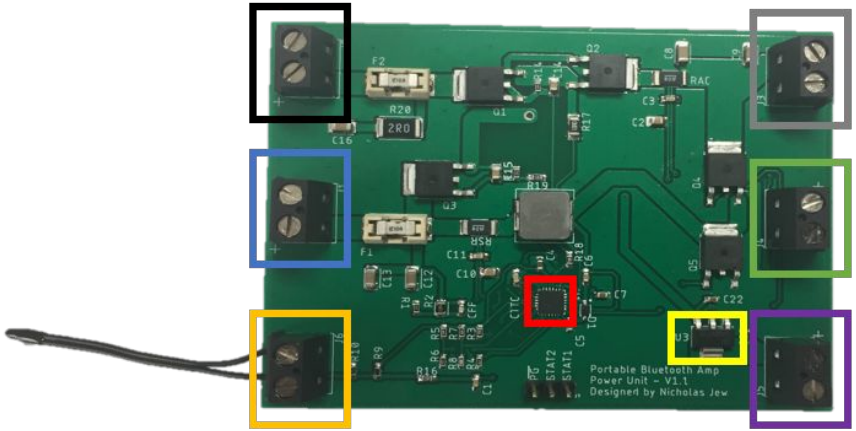

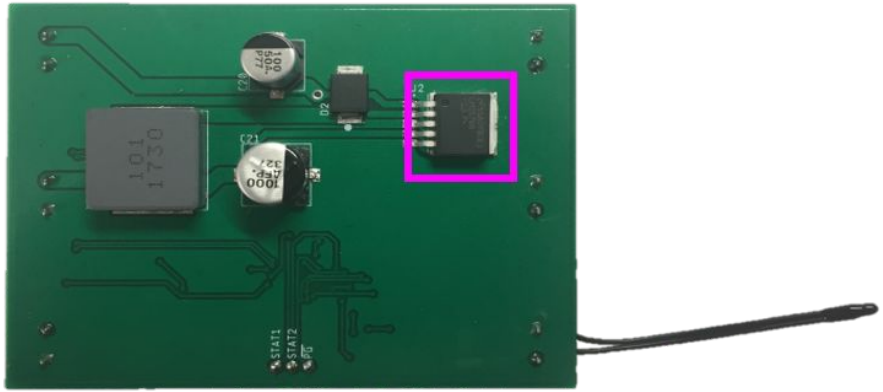

- Removable 26V Supply Terminal
- Internal ~25.2V Lithium Battery Terminal
- NTC Thermistor Terminal
- 20-26V Output Supply Terminal
- 3.3V Output Supply Terminal
- 1.8V Output Supply Terminal

- BQ24610RGER Charge IC
- LM2576SX-3.3/NOPB Switching Regulator
- TLV1117LV18DCYR Linear Regulator

Power Unit - Battery Verification

- Lithium Polymer 6-Cell Battery (22.2-25.2V)
- 8000mAh (8.0Ah) Manufacturer-Rated Capacity
  - Maximum of 2A draw needed from battery
  - 8.0Ah / 2A = 4 hours
- Physical Test
  - UltraPower UP120AC Duo Battery Charger/Discharger
  - Starting Voltage: 25.19VDC
  - Ending Voltage: 21.54VDC
  - Constant Current Draw: 2.0A
  - Elapsed Time: 225min 32sec → 3.7589 hours

Power Unit - Output Verification

- 20-26V Line
  - Input: 25.9997VDC
  - Output (No Load): 25.9959VDC
  - Output (3.0711A Load): 25.7756VDC
- 3.3V Line
  - Input: 25.9998VDC
  - Output (No Load): 3.32030VDC
  - Output (2.5230A Load): 3.30115VDC
- 1.8V Line
  - Input: 26.0001VDC
  - Output (No Load): 1.79331VDC
  - Output (0.8201A Load): 1.80122VDC

Audio Unit

Powers speaker with a digital or analog input

Audio Unit - Overview

- Input
  - Analog audio via 3.5mm cable
  - Digital PCM
- Output
  - 25w RMS amplified input

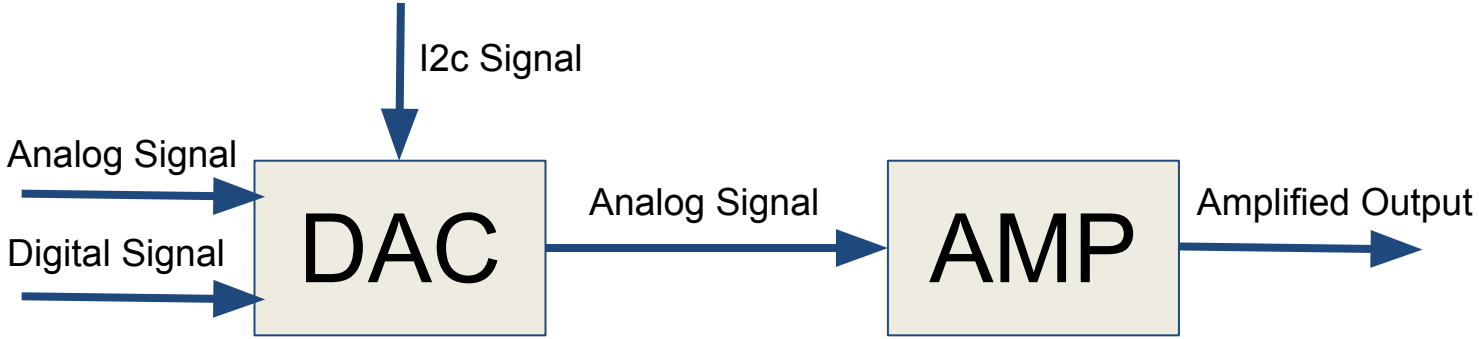

Audio Unit - Amp Prototype

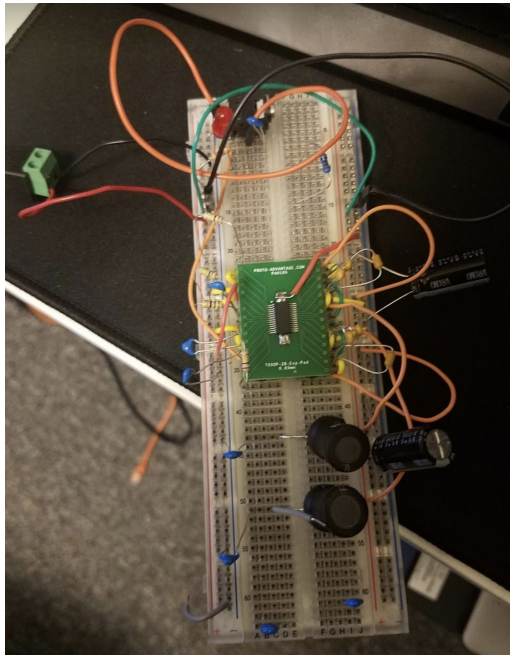

Audio Unit - Lessons Learned

- Long traces cause trace inductance
  - Voltage Spikes
- Protoboarding IC Chips is difficult

Audio Unit - Amp Final Design

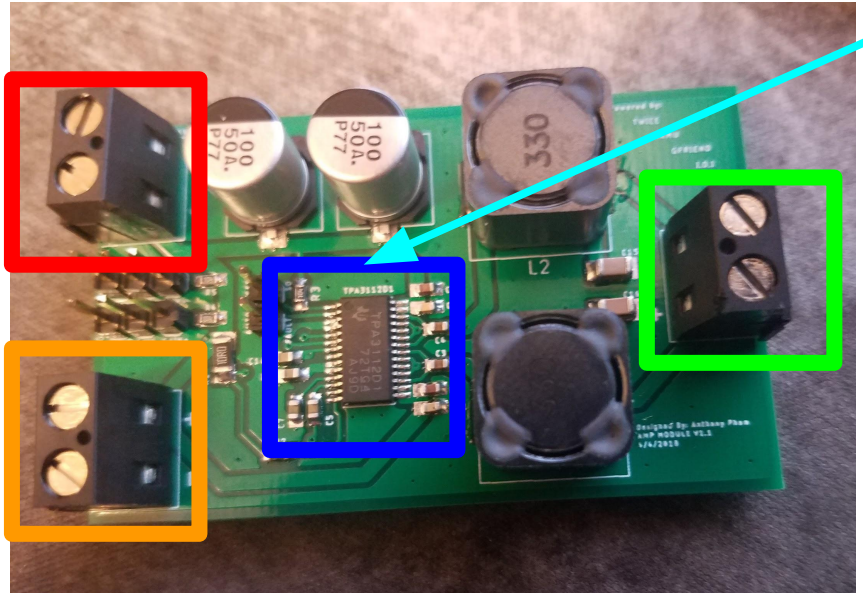

Audio Unit - Amp Verification

- Requirement:
  Input: 1khz Sine Wave
  Output: 1khz Sine Wave
  > 20W

Audio Unit - DAC

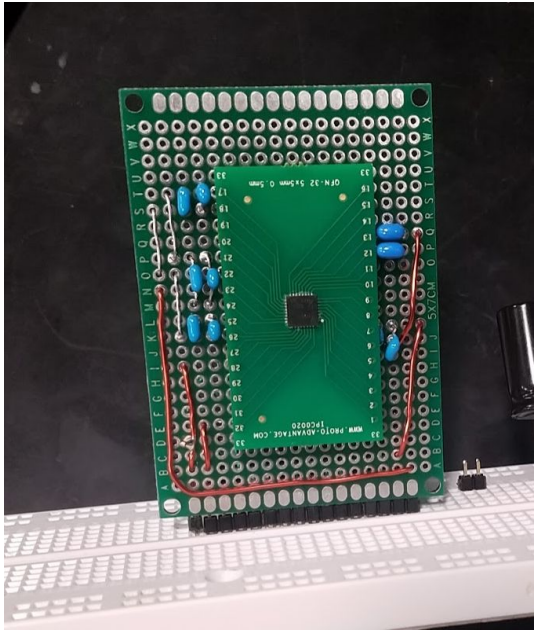

TLV320AIC3109-Q1 DAC

Audio Unit - DAC Pipeline

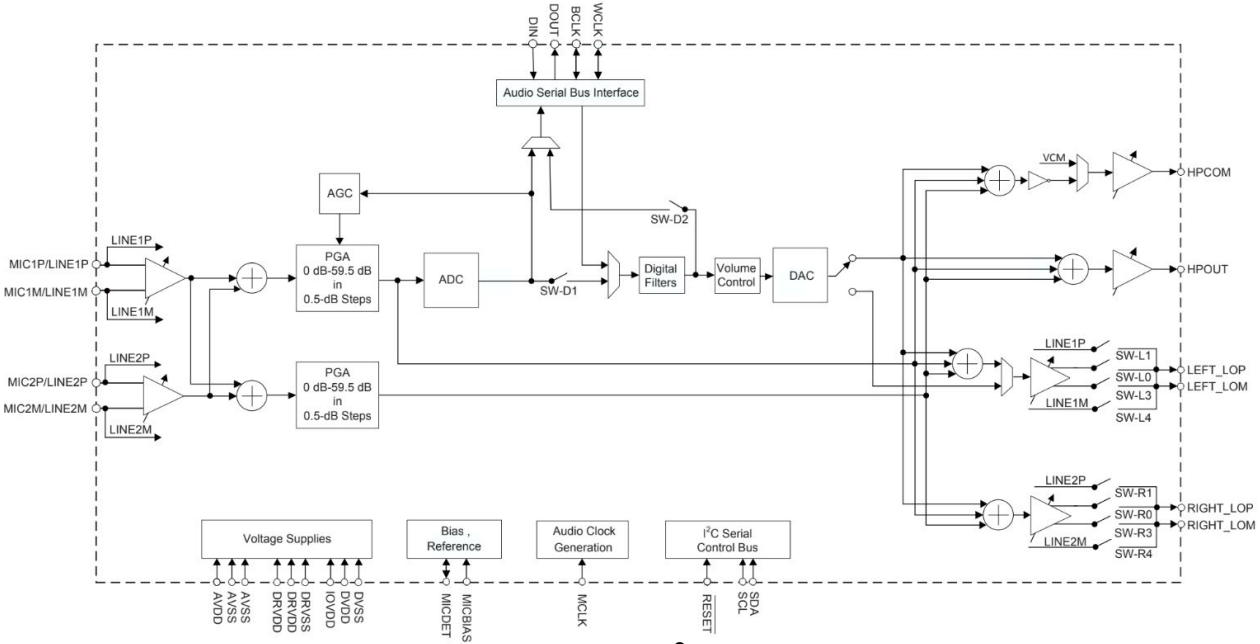

TLV320AIC3109-Q1[3] Block Diagram

Audio Unit - DAC Programming

- Calculate PLL values for Clock
- Open all switches for path
- Power on components

```
f0: 00 00 00 00 00 00 00 00 00 00 00 00 00 00 00 00    ................
pi@raspberrypi:~ $ i2cset -y 1 0x18 0x66 0x20
pi@raspberrypi:~ $ i2cdump -y 1 0x18
No size specified (using byte-data access)
     0  1  2  3  4  5  6  7  8  9  a  b  c  d  e  f    0123456789abcdef
00: 00 00 aa 85 c0 00 00 00 00 40 11 00 00 00 00 80    ..???....@?....?
10: 80 ff ff 78 78 78 78 78 78 06 00 fe 00 00 fe 00    ?..xxxxxx?.?..?.
20: 00 00 00 00 00 80 00 00 00 40 00 00 80 00 00 00    .....?...@..?...
30: 00 00 00 04 00 00 00 00 00 00 04 00 00 00 00 00    ...?......?.....
40: 00 04 00 00 00 00 00 00 04 00 00 00 00 00 00 00    .?......?.......
50: 00 00 80 00 00 00 0b 00 00 00 00 00 00 00 90 00    ..?...?.......?.
60: 00 00 00 00 00 00 20 00 00 00 00 00 00 00 00 00    ...... ........
70: 00 00 00 00 00 00 00 00 00 00 00 00 00 00 00 00    ................
80: 00 00 aa 85 c0 00 00 00 00 40 11 00 00 00 00 80    ..???....@?....?
90: 80 ff ff 78 78 78 78 78 78 06 00 fe 00 00 fe 00    ?..xxxxxx?.?..?.
a0: 00 00 00 00 00 80 00 00 00 40 00 00 80 00 00 00    .....?...@..?...
b0: 00 00 00 04 00 00 00 00 00 00 04 00 00 00 00 00    ...?......?.....
c0: 00 04 00 00 00 00 00 00 04 00 00 00 00 00 00 00    .?......?.......
d0: 00 00 80 00 00 00 0b 00 00 00 00 00 00 00 90 00    ..?...?.......?.
e0: 00 00 00 00 00 00 20 00 00 00 00 00 00 00 00 00    ...... ........
f0: 00 00 00 00 00 00 00 00 00 00 00 00 00 00 00 00    ................
pi@raspberrypi:~ $ i2cset -y 1 0x18 0x0A 0x10
pi@raspberrypi:~ $ i2cset -y 1 0x18 0x0A 0x11
pi@raspberrypi:~ $ i2cset -y 1 0x18 0x0A 0x10
pi@raspberrypi:~ $ i2cset -y 1 0x18 0x0A 0x11
pi@raspberrypi:~ $
```

Audio Unit - DAC Verification

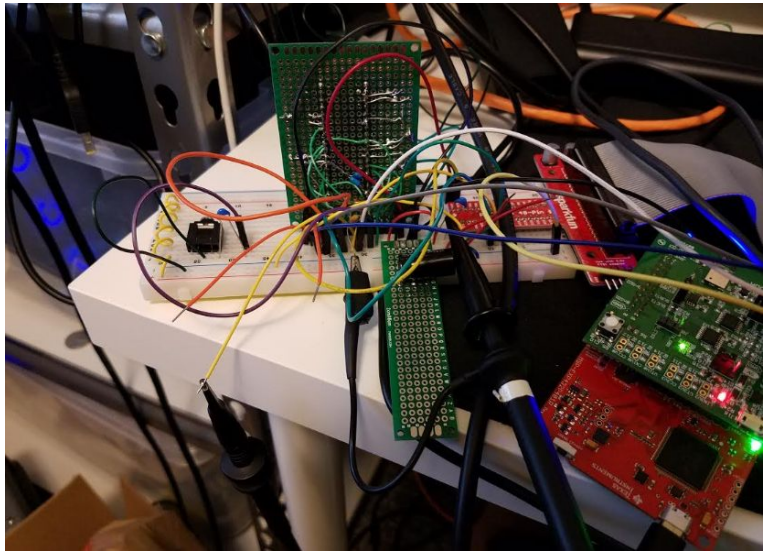

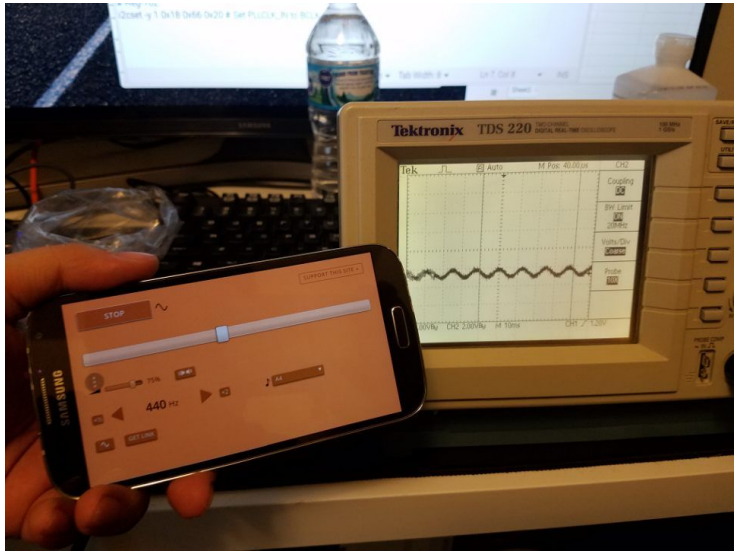

Digital Logic Unit

Manages human input and Bluetooth audio streams

Digital Logic Unit

Design in Development:

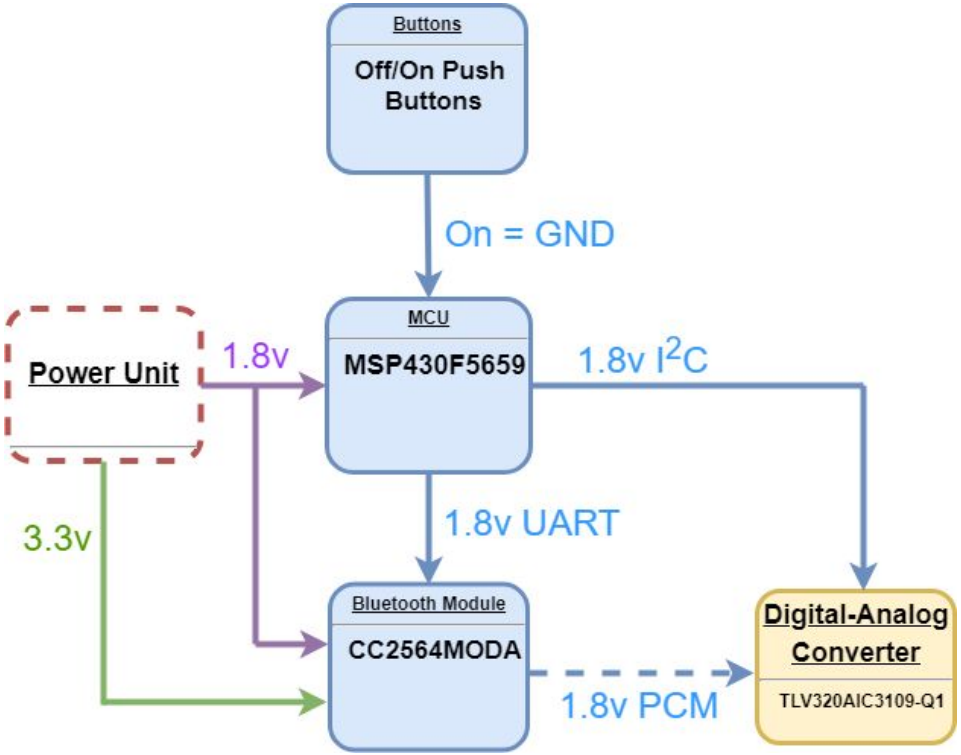

Benefits

- Simple design
- Easy integration

Digital Logic Unit

MSP430F5659

- 512kB flash memory
- Ultra-low power consumption
- Supports CC2564MODA stack

MSP430F5659 Maximum Power Consumption for Bluetooth Amp
295 μA/MHz @ 8MHz [3]
295μA * 8 = 2.36mA
2.36mA * 1.8V = 4.248 mW

Digital Logic Unit

CC2564MODA

- Integrated antenna
- Small footprint
- Fully Bluetooth certified
- Loyalty-free stack for MSP430

Digital Logic Unit

Physical design:

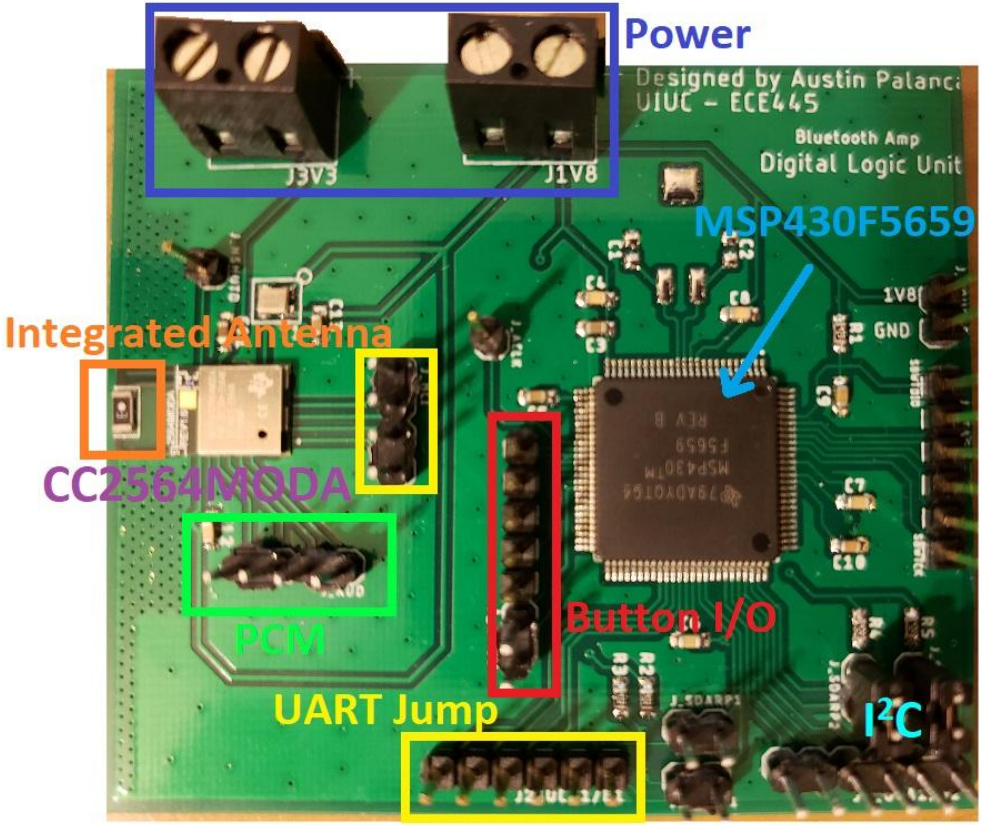

Considerations

- Prototyping headers
- Isolated digital lines

Bluetooth Transport Layers

[4]

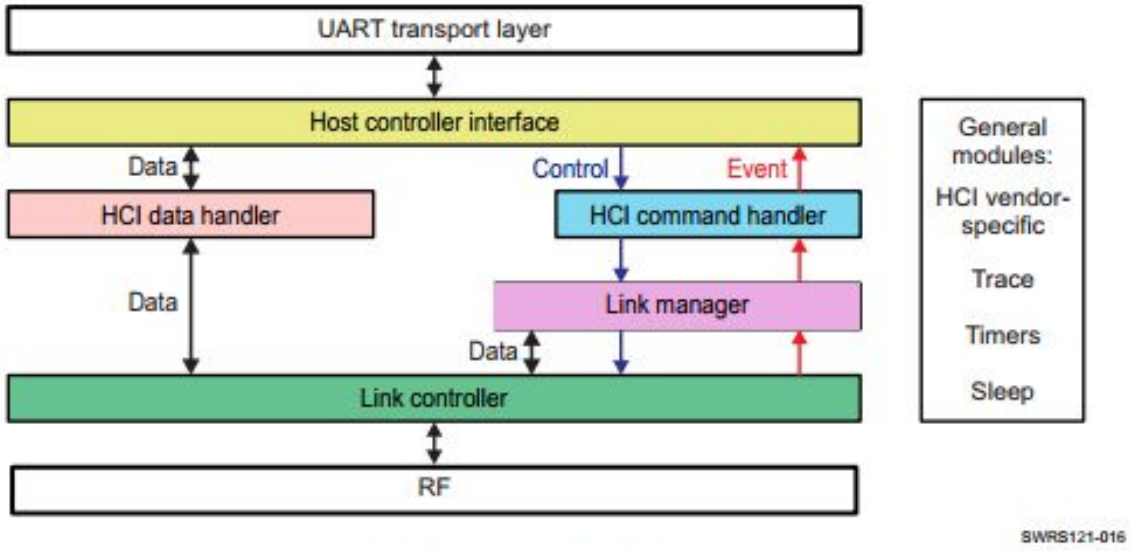

Bluetooth Stack

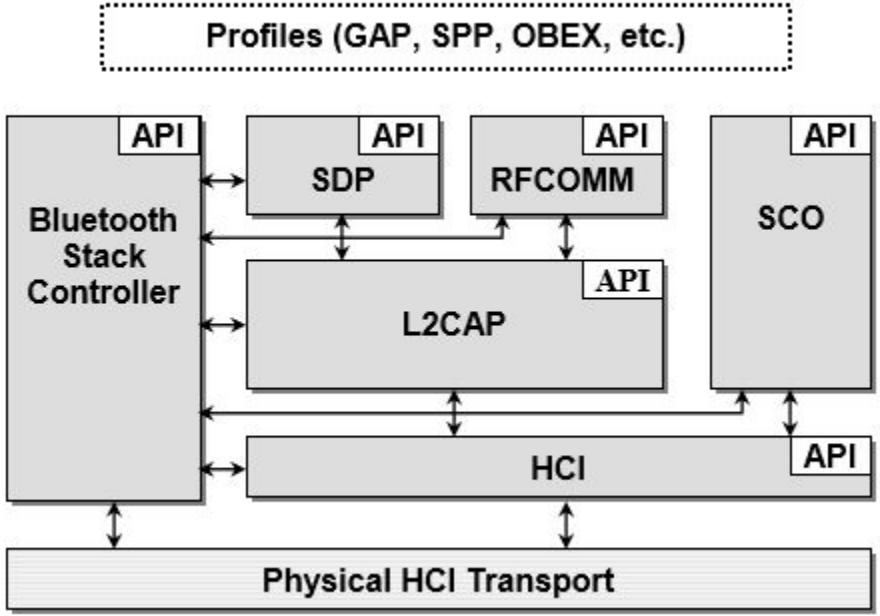

[5]

Bluetooth Audio Stream Stack

Device Pairing Management

- General Access Profile

Audio Stream

- Advanced Audio Distribution Profile

Digital Logic Unit

Design Process:

1. Breadboard failure
2. MSP430F5529
3. Time shortage

Digital Logic Unit

Working Prototype

- MSP432P401R launchpad
- BOOST-CC2564MODA

[5]

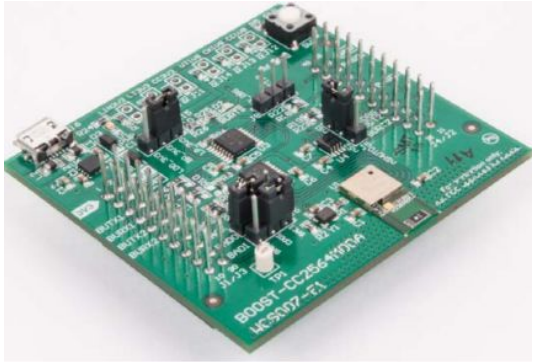

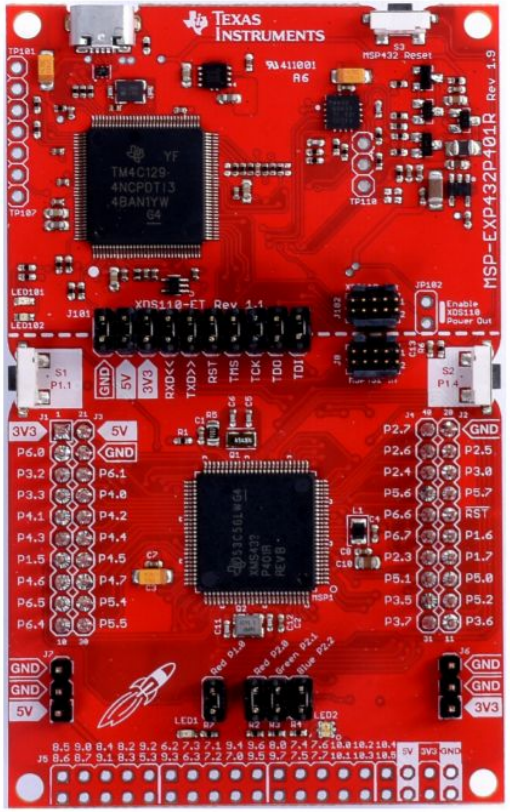

[7]

DLU Verifications

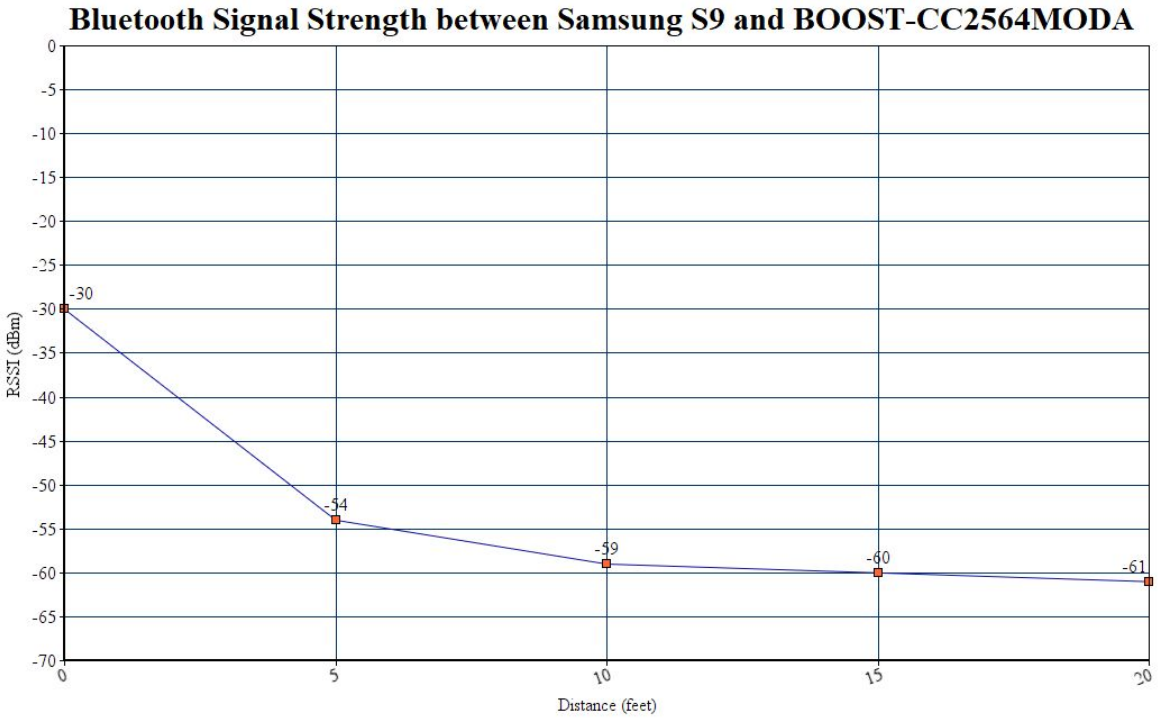

Digital Logic Unit - DAC

<u>Requirement:</u> PCM data with 44.1 kHz sampling rate, 16 bits per frame via I^2S timing

<u>Success:</u> DSP timing - lower power consumption!

PCM - DSP Transmission Timing

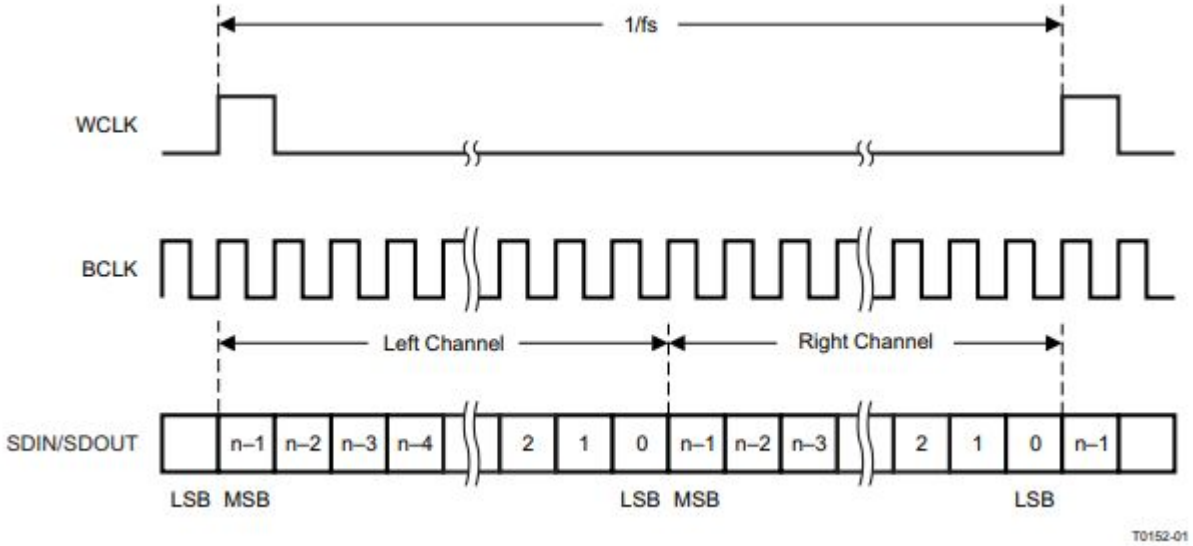

DSP Timing WCLK

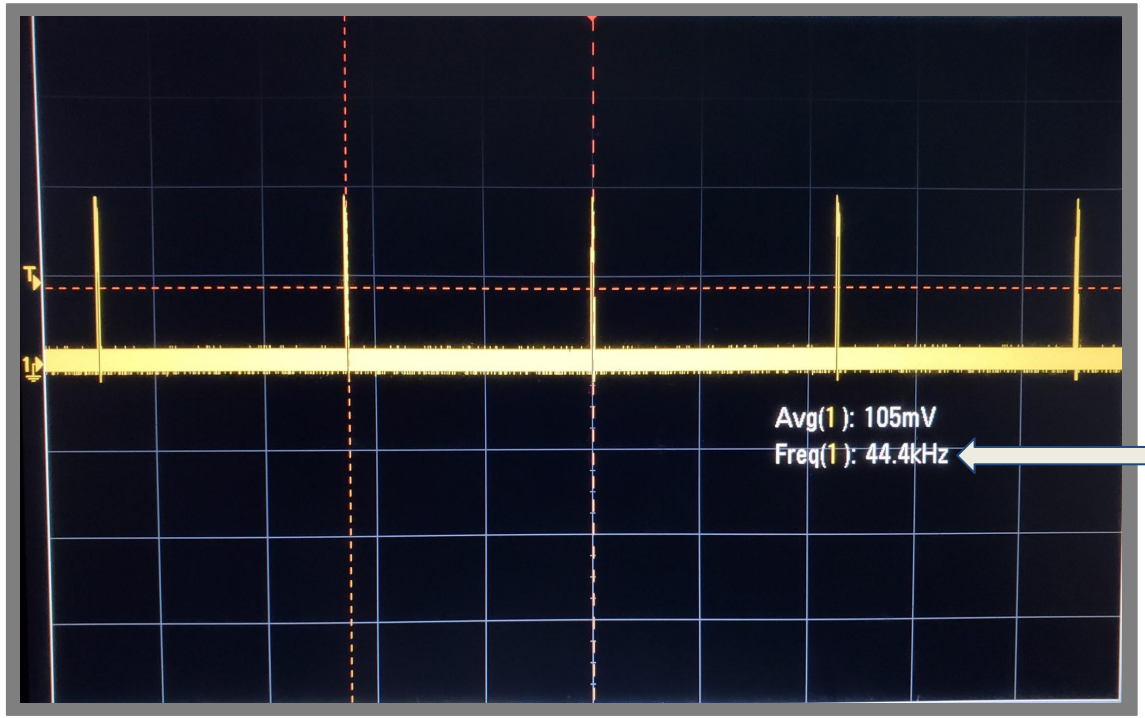

Probe error

DSP Timing BCLK

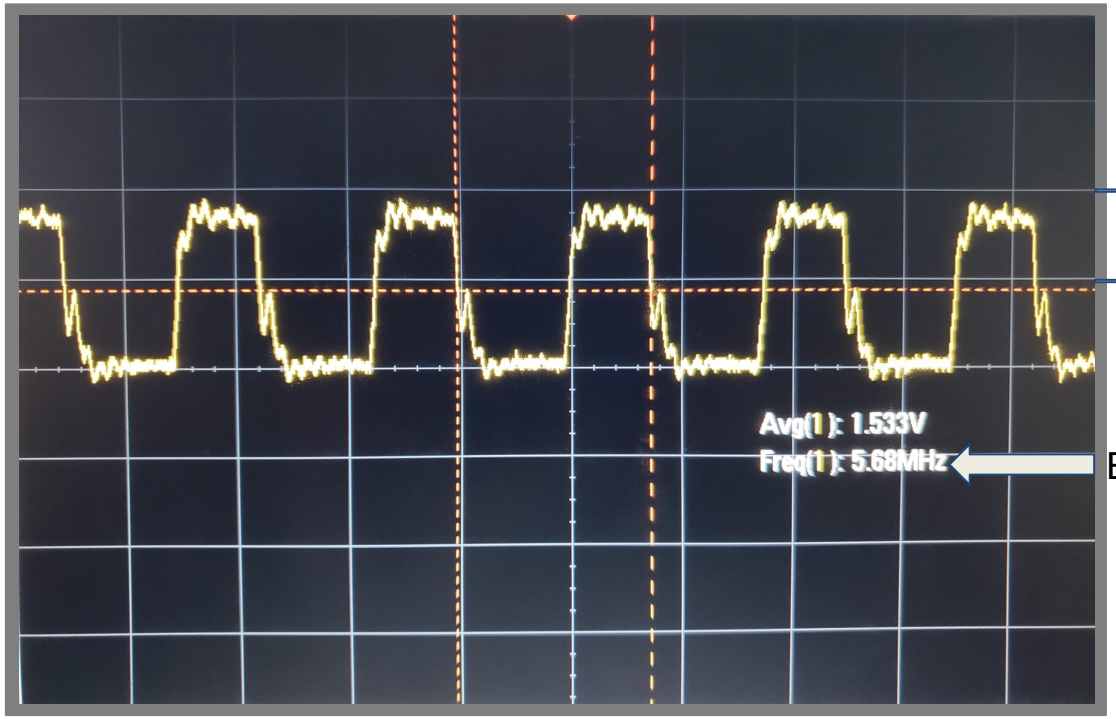

2.00v

BCLK Freq ≈ 5.6448 MHZ

DSP Timing BCLK

Conclusion and The Future

Conclusion

- Got all units working, R&V verified
- Learned a lot about proper PCB design/layout

The Future

- Bluetooth 5.0 to support multiple amplifiers simultaneously
- More powerful Amplifier
- Molded enclosure for a more complete product

Citations

[1] Amazon, “Dayton Audio DTA-120”. Available: https://www.amazon.com/Dayton-Audio-DTA-120-Digital-Amplifier/dp/B00HFG3FYA/ref=sr_1_15?s=electronics&ie=UTF8&qid=1525072588&sr=1-15&keywords=stereo+amp+banana+plug

[2] Crutchfield, “Speaker Wire”. Available: https://www.crutchfield.com/S-7vnvSVb86yP/learn/learningcenter/home/speakers_wire.html

[3] Texas Instruments. CC2564MODx Datasheet. Available: http://www.ti.com/lit/ds/symlink/cc2564moda.pdf

[4] Texas Instruments. MSP430F(665x/645x)/(565x/535x) Datasheet. Available: http://www.ti.com/lit/ds/symlink/msp430f5659.pdf

[5] Texas Instruments. Dual-Mode Bluetooth® CC2564 BoosterPack™ User's Guide. Available: http://www.ti.com/lit/ug/swru444/swru444.pdf

[6] Stonestreet One. Bluetopia Architecture Overview.

[7] Texas Instruments. MSP432P401R SimpleLink™ Microcontroller LaunchPad™ User’s Guide. Available: http://www.ti.com/lit/ug/slau597f/slau597f.pdf

Thank You!

Appendix

Appendix - Power Unit Calculation

- Amplifier: 1.2A at 24V [1]
- DAC: 1.2A at 3.3V and 2.45mA at 1.8V [2]
- Bluetooth: 112.5mA at 3.3V and 100mA at 1.8V [3]
- Microcontroller: 500mA at 1.8V [4]

[1] Texas Instruments, “TPA3112D1 Datasheet”. Available: http://www.ti.com/lit/ds/symlink/tpa3112d1.pdf. [Accessed 21-Mar-2018]
[2] Texas Instruments, “TLV320AIC3109-Q1 Datasheet”. Available: http://www.ti.com/lit/ds/symlink/tlv320aic3109-q1.pdf. [Accessed 21-Mar-2018]
[3] Texas Instruments, “CC2564MODA Datasheet”. Available: http://www.ti.com/lit/ds/symlink/cc2564moda.pdf. [Accessed 21-Mar-2018]
[4] Texas Instruments, “MSP430F5418A Datasheet”. Available: http://www.ti.com/lit/ds/symlink/msp430f5418a.pdf. [Accessed 21-Mar-2018]

Appendix - Power Unit Calculation

$$1.8V: \quad 2.45mA + 100mA + 500mA = 602.45mA$$

$$1.8V: \quad 1.8V \cdot 602.45mA = 1.084W$$

$$3.3V: \quad 4.31mA + 112.5mA + \left(\frac{1.084W}{3.3V} \div 75\%_{efficiency}\right) = 554.790mA$$

$$3.3V: \quad 3.3V \cdot 554.790mA = 1.831W$$

$$26V: \quad 1.2A + \left(\frac{1.831W}{26V} \div 75\%_{efficiency}\right) = 1.294A$$

$$26V: \quad 26V \cdot 1.294A = 33.644W$$

$$33.644W \div 22.2V = 1.515A$$

Appendix - Power Unit Schematic

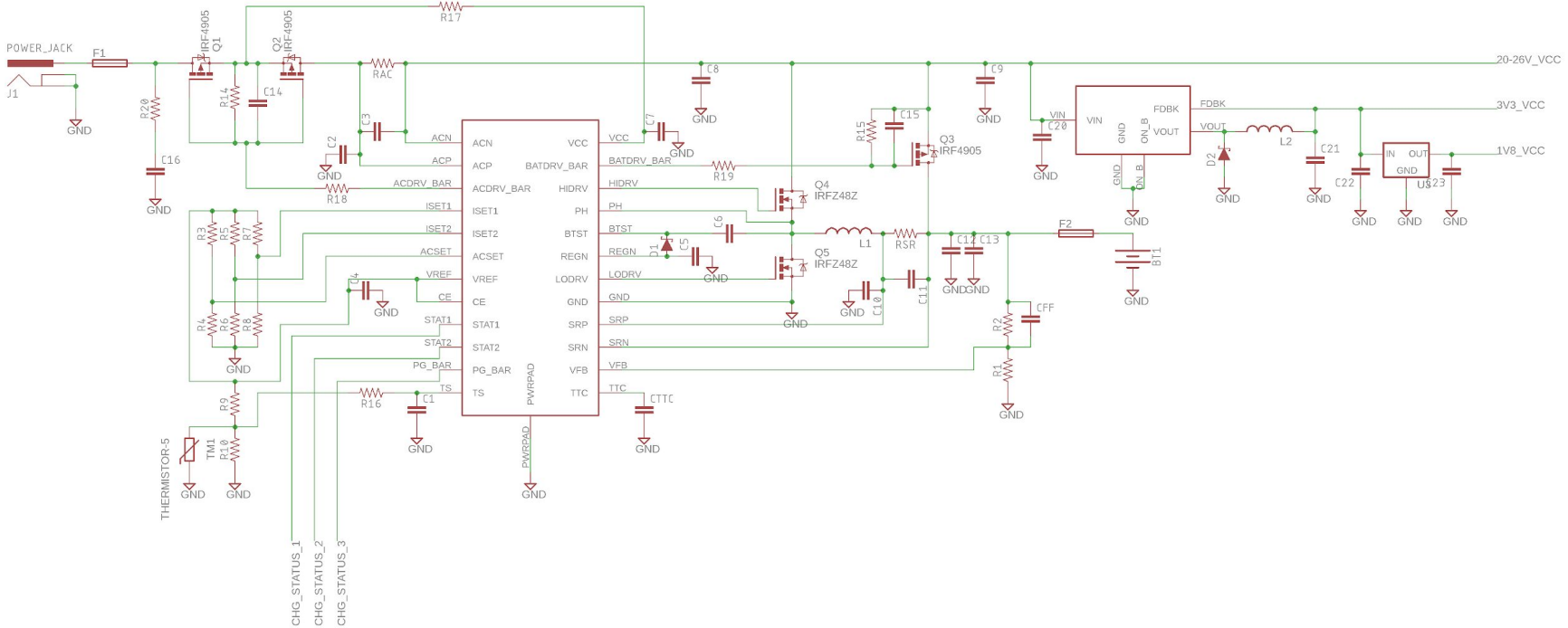

ILLINOIS

Appendix - Power Unit Board Layout

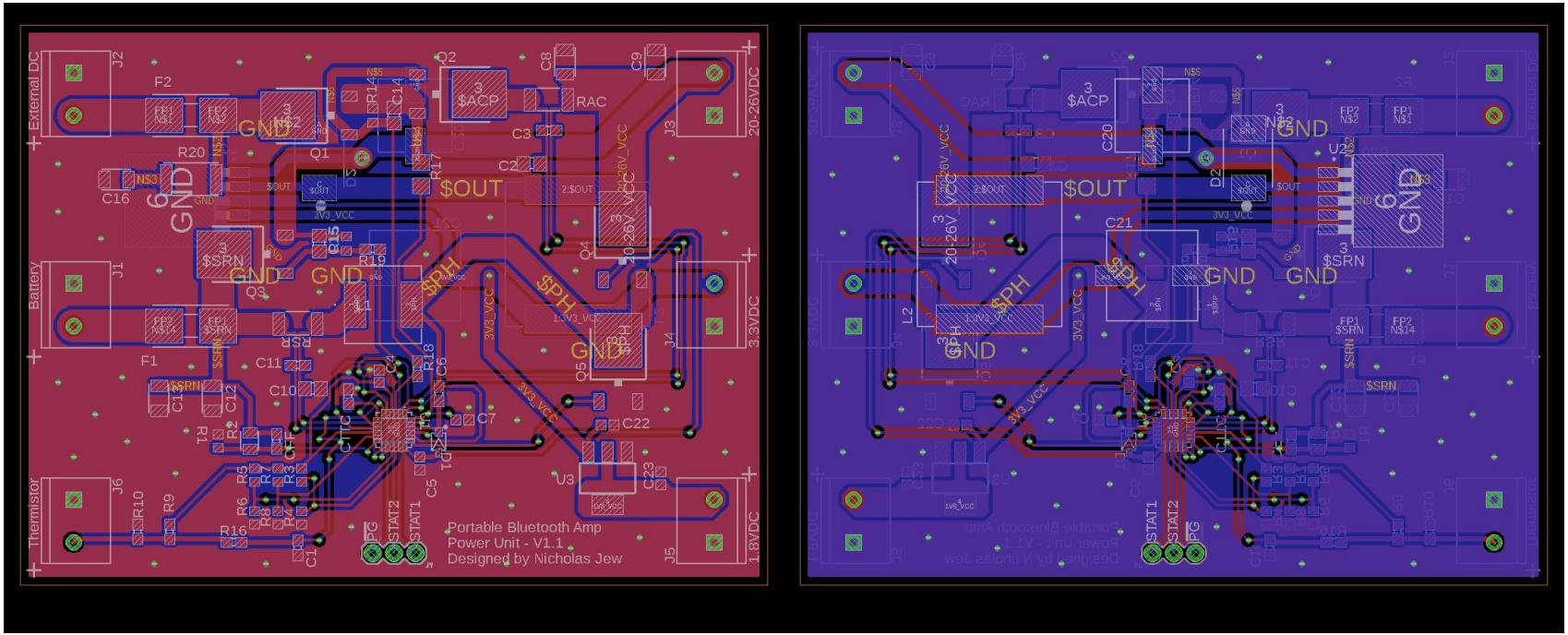

Appendix

DAC Programming

```
# Reg-2
i2cset -y 1 0x18 0x02 0xAA # Fs divide by 6
# Reg-3
i2cset -y 1 0x18 0x03 0x85 # PLL On, Q=16, P=5
# Reg-4
i2cset -y 1 0x18 0x04 0xC0 # J=48
# Reg-7
i2cset -y 1 0x18 0x07 0x18 # unmute DAC
# Reg-8
i2cset -y 1 0x18 0x08 0x00 # Slave Mode
# Reg-9
i2cset -y 1 0x18 0x09 0x40 # DSP Mode, 16 bit word
# Reg-10
i2cset -y 1 0x18 0x0A 0x11 # 17 bit offset
# Reg-11
i2cset -y 1 0x18 0x0B 0x00 # pll R=16
# Reg-37
i2cset -y 1 0x18 0x25 0x80 # Power Dac On
# Reg-41
i2cset -y 1 0x18 0x29 0x40 # Set Dac output to LOP
# Reg-43
i2cset -y 1 0x18 0x2B 0x00 # UnMute Dac
# Reg-82
i2cset -y 1 0x18 0x52 0x80 # Dac to LOP Mux
# Reg-86
i2cset -y 1 0x18 0x56 0x08 # Un-Mute LOP, maybe 0x09
# Reg-102
i2cset -y 1 0x18 0x66 0x20 # Set PLLCLK_IN to BCLK
```

Appendix
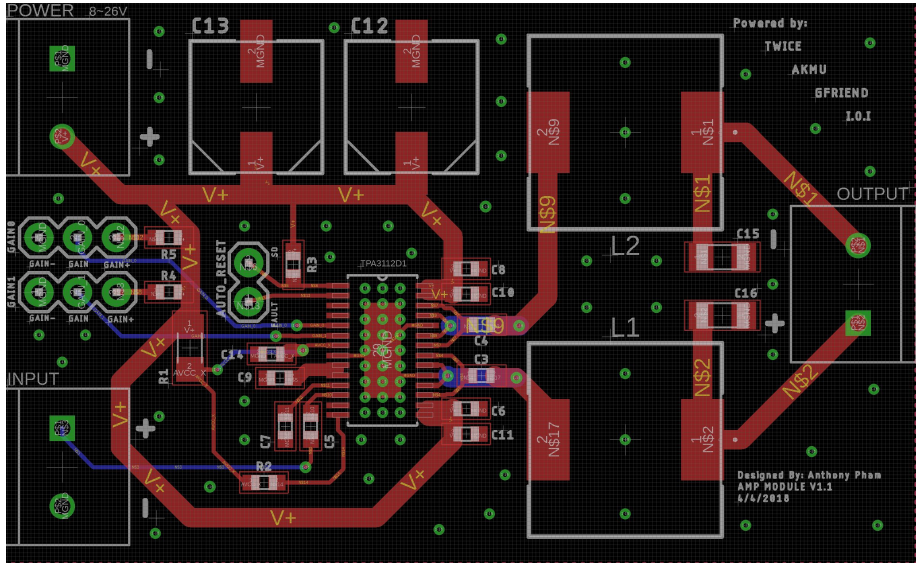
Amplifier Board Layout