Security Blanket

Team 66

Huiyuan Liu, Yingquan Yu

ECE 445 Senior Design

04/30/2018

Introduction

- Water breaks? Phone Calls?
- Privacy and security concerns?
- Our Blanket provides a great solution to protect your personal item in the public spaces

The Blanket

- Soft material to cover it on any personal items
- Bluetooth module for easy set up
- Wi-Fi for long range monitor capability
- Battery last at least 12 hours

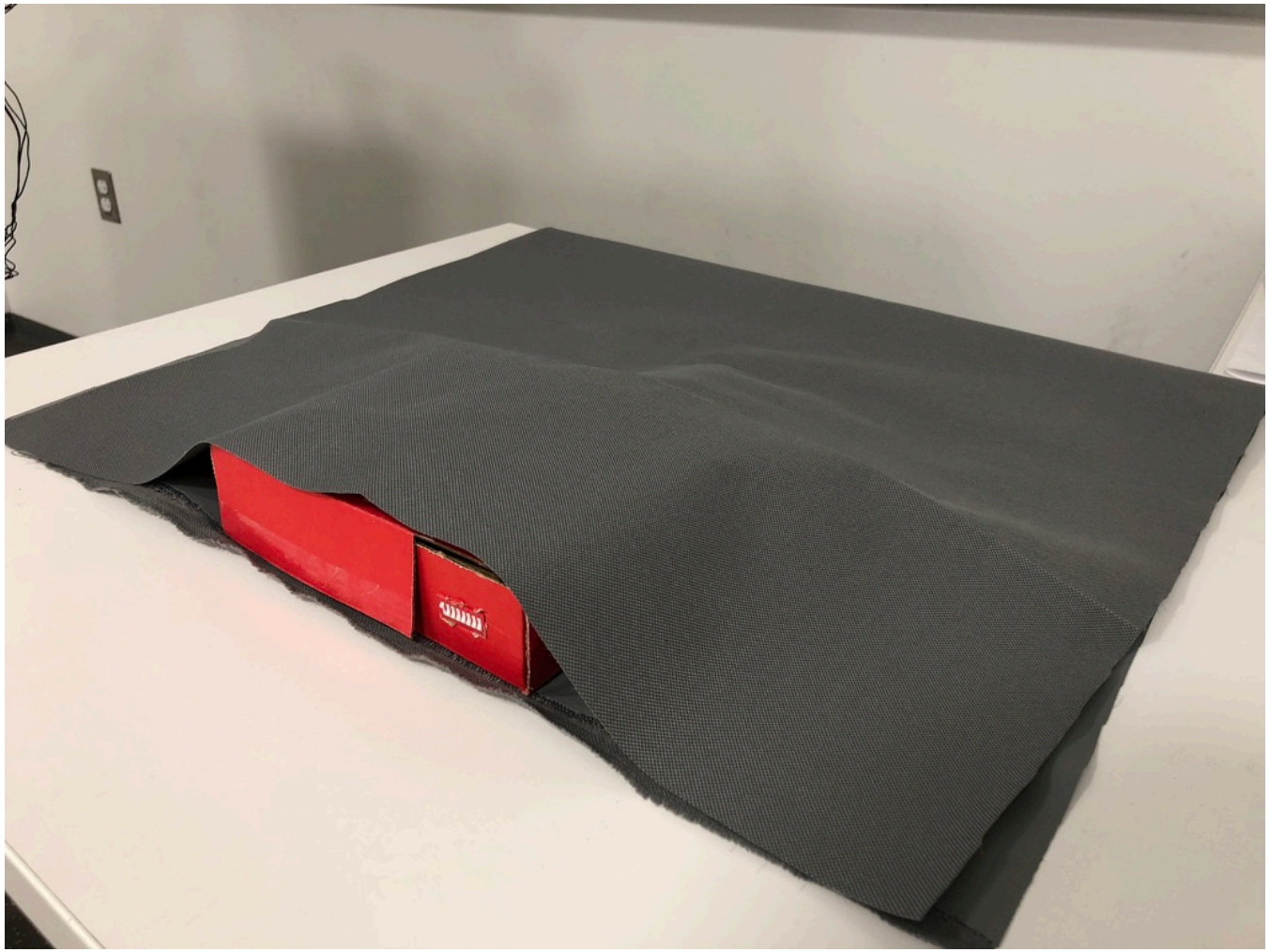

System Overview

- Hardware
  - Charging Circuit, Voltage Regulator, Boost Converter
  - MCU, Sensor Groups, LED, Buttons, Buzzer
  - Bluetooth, Wi-Fi
- Software
  - Android Application
  - Server

System Overview

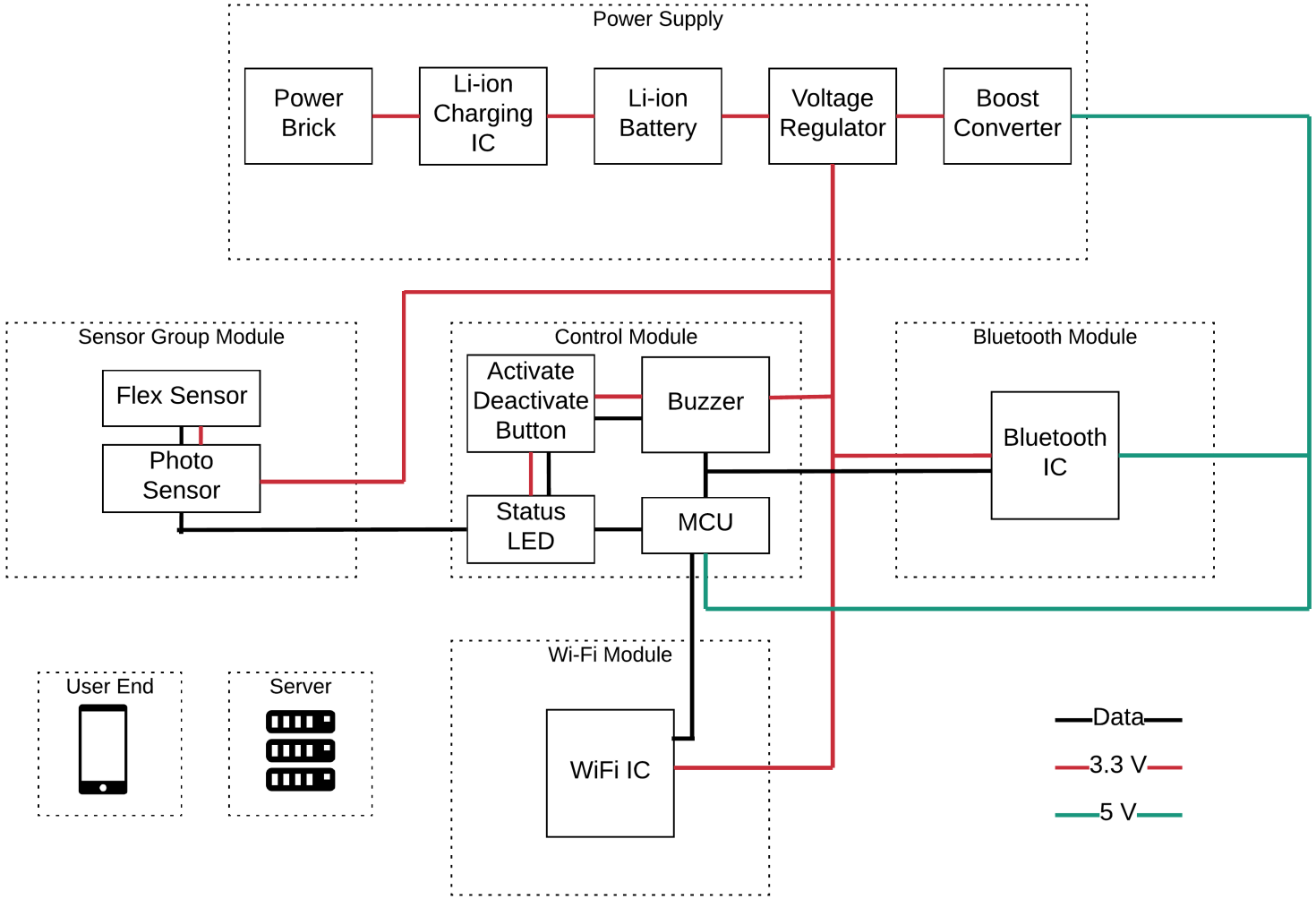

Fig.1 Block Diagram

Power Supply

- Charging Circuit and Voltage Regulator
- Boost Converter

Charging Circuit and Voltage Regulator

- Maximum current draw 2.5A under 3.3V
- Fast charging up to 1.25A at 4.2V
- Cut off Temperature 50°C
- USB Type-C connection

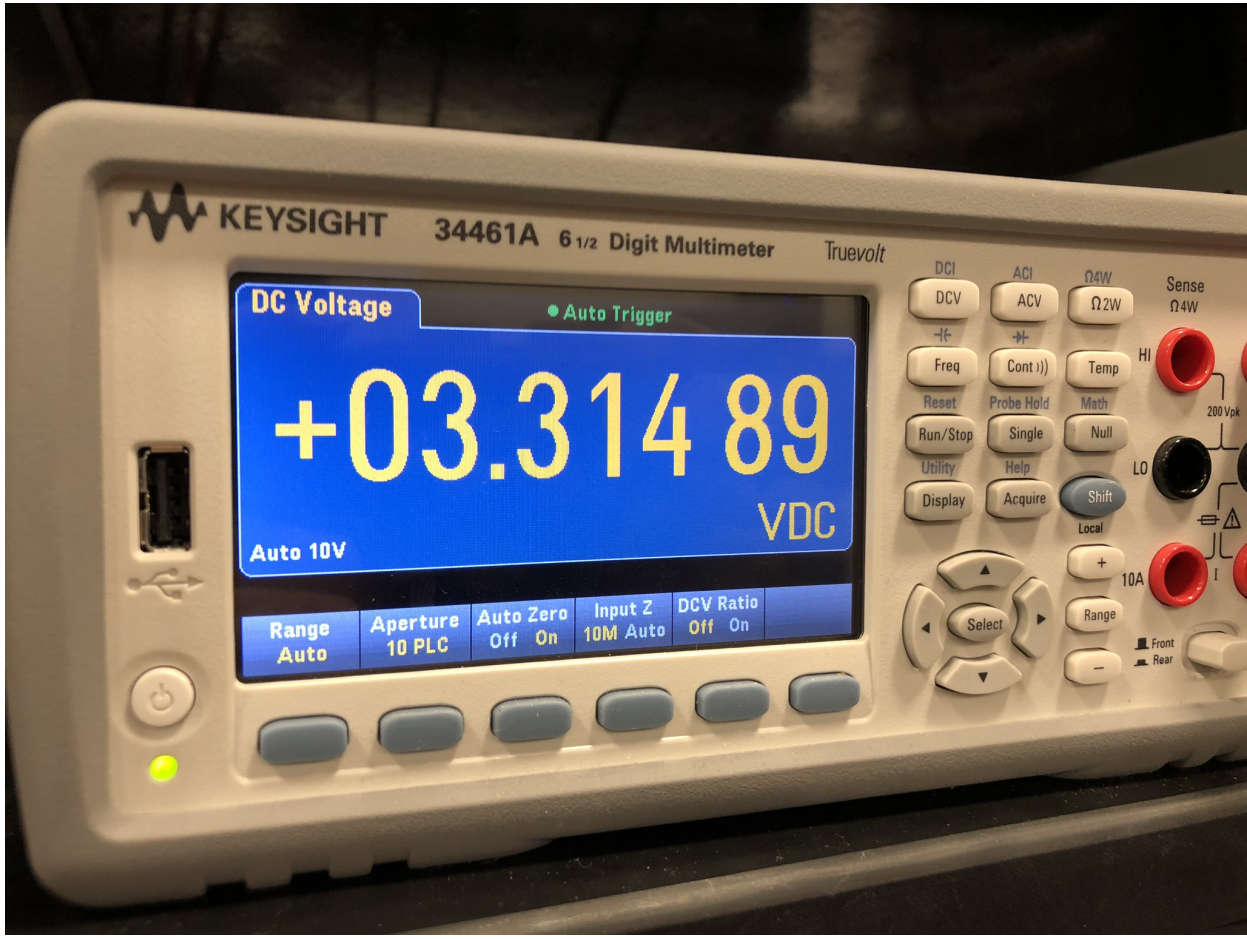

Charging Circuit and Voltage Regulator

- Maximum current draw 2.5A under 3.3V
- Fast charging up to 1.25A at 4.2V
- Cut off Temperature 50°C
- USB Type-C connection

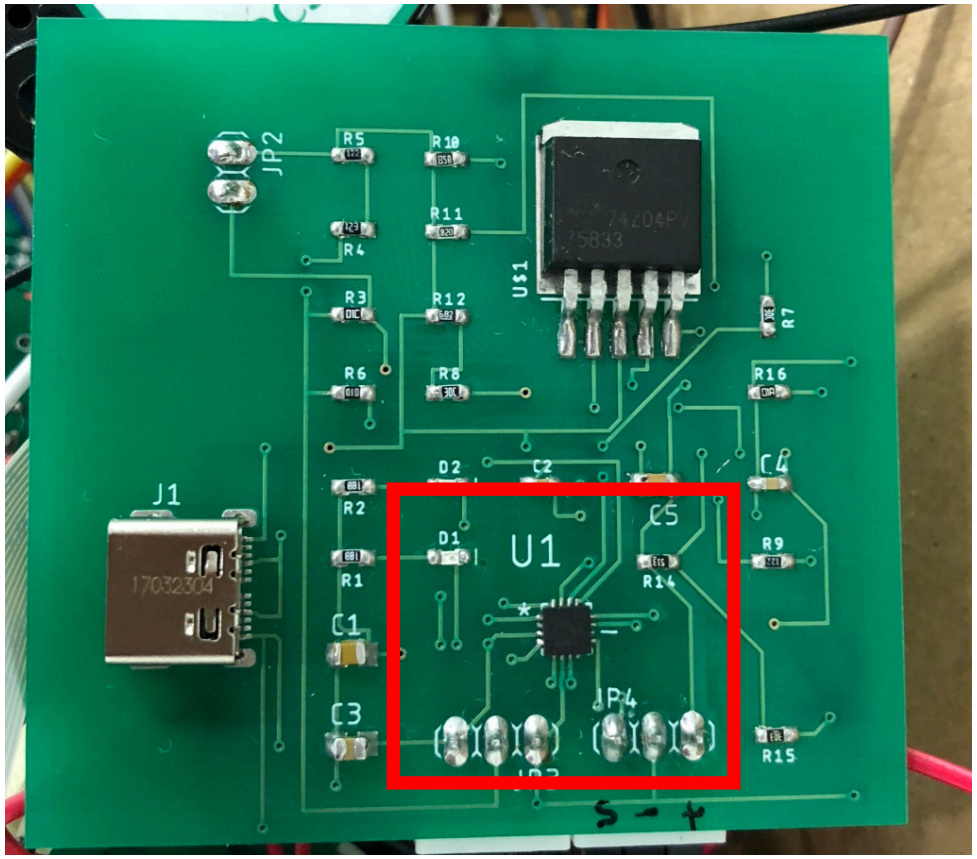

Charging Circuit and Voltage Regulator

- Maximum current draw 2.5A under 3.3V
- Fast charging up to 1.25A at 4.2V
- Cut off Temperature 50°C
- USB Type-C connection

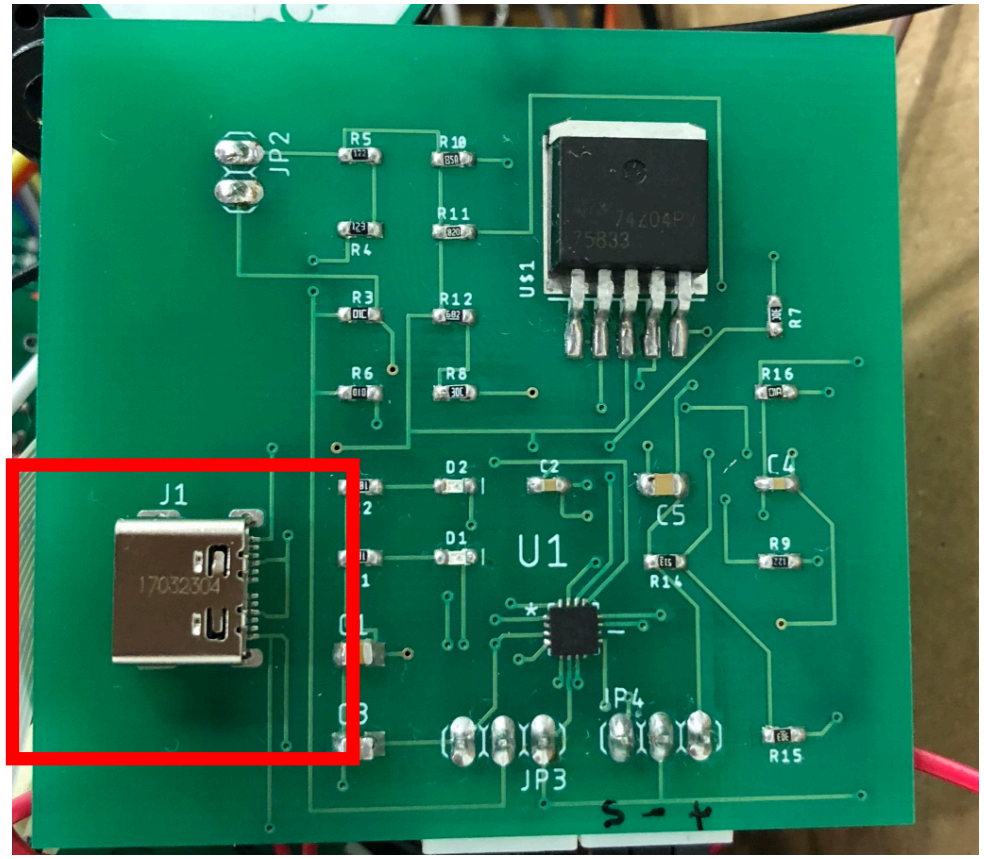

Charging Circuit and Voltage Regulator

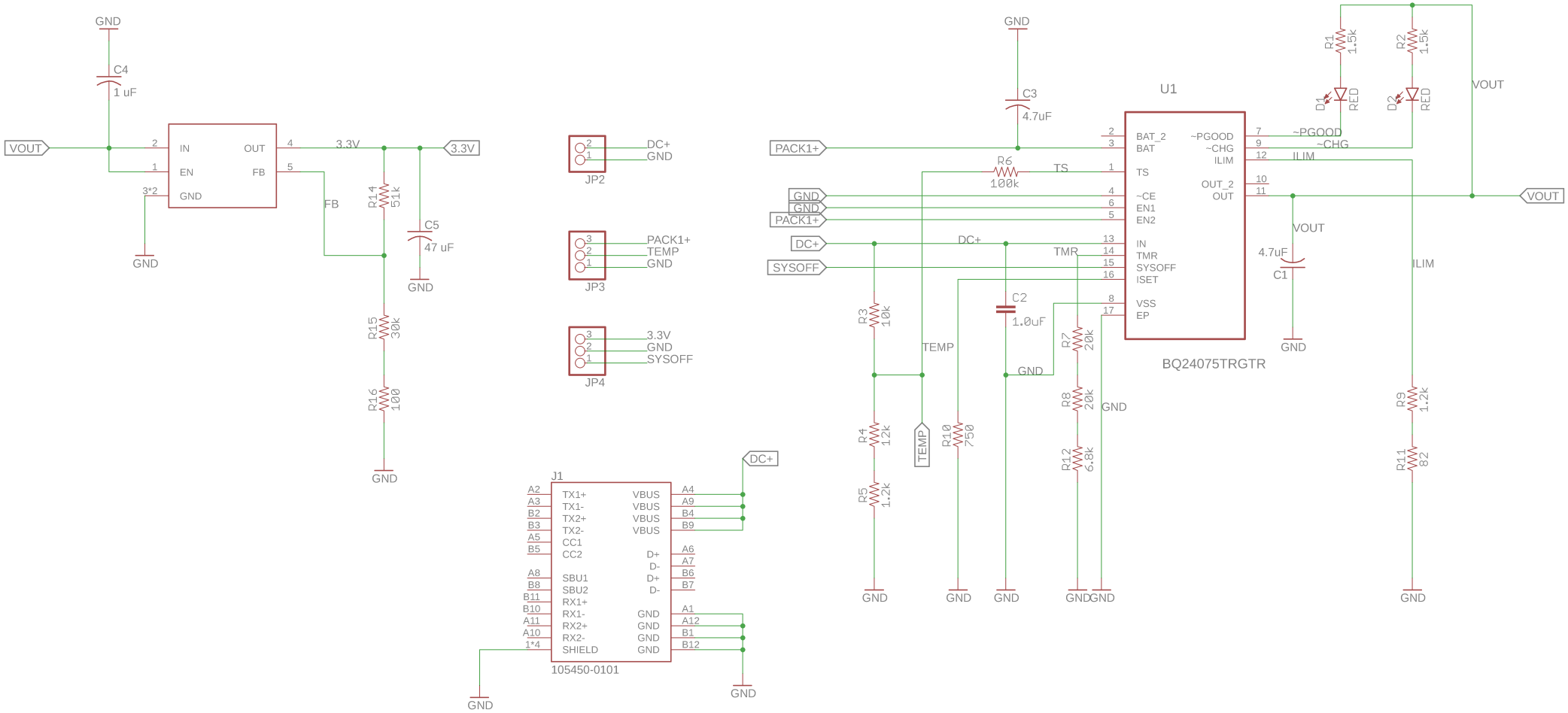

Charging Circuit and Voltage Regulator

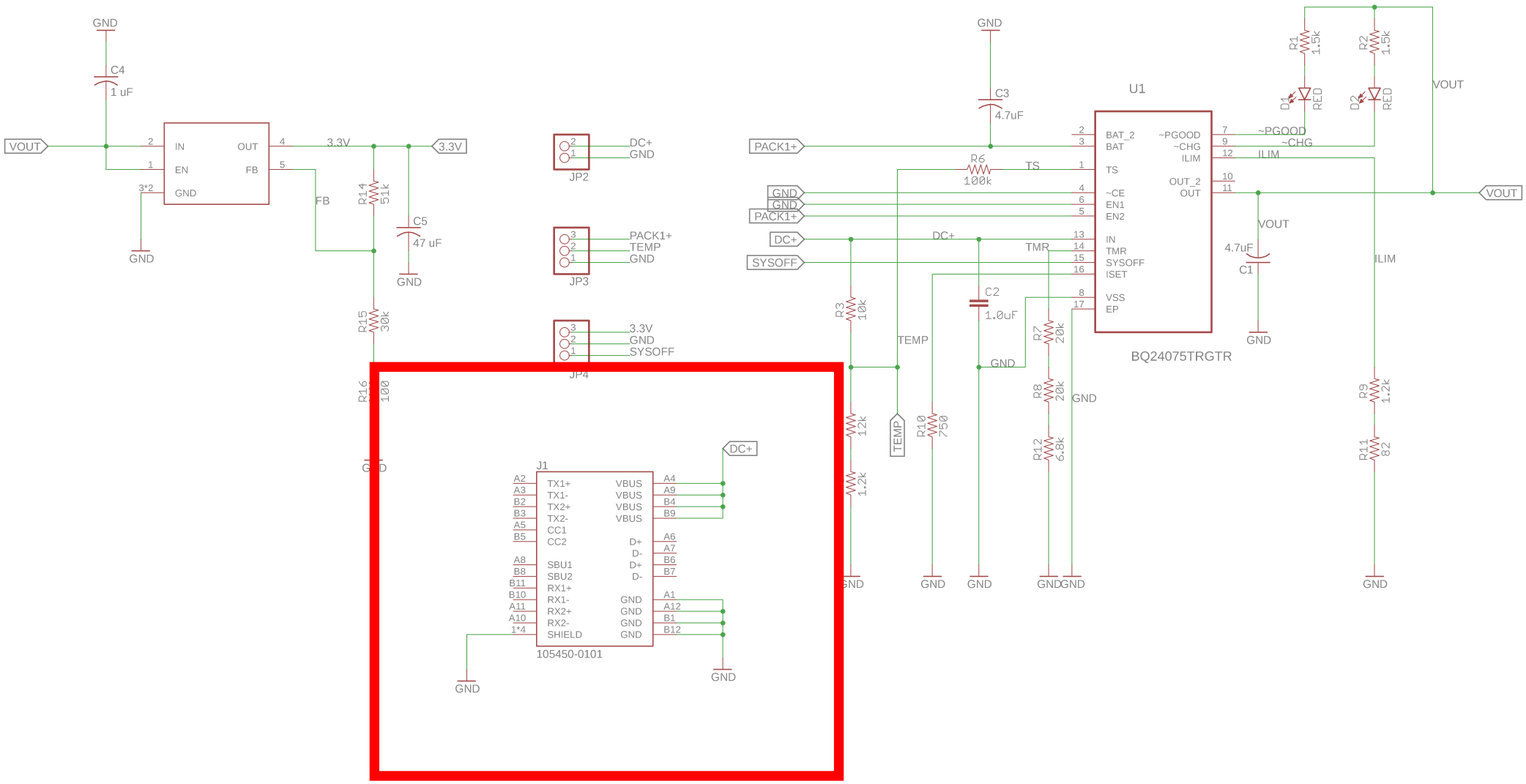

Charging Circuit

Program the Fast Charge Current (ISET):

$R_{ISET} = K_{ISET} / I_{CHG}$

K_{ISET} = 890 AΩ from the *Electrical Characteristics* table

R_{ISET} = 890AΩ / 1.25A = 710 Ω

Program the Input Current Limit (ILIM):

$R_{ILIM} = K_{ILIM} / I_{IN(MAX)}$

K_{ILIM} = 1600 AΩ from the *Electrical Characteristics* table

R_{ILIM} = 1600 AΩ / 2.5 A = 640 Ω

Program 6.25-hour Fast-Charge Safety Timer (TMR):

$R_{TMR} = t_{MAXCHG} / (10 \times K_{TMR})$

K_{TMR} = 45 s/kΩ from the *Electrical Characteristics* table

R_{TMR} = (6.25 hour × 3600 s/hour) / (10 x 45 s/kΩ) = 46.8kΩ

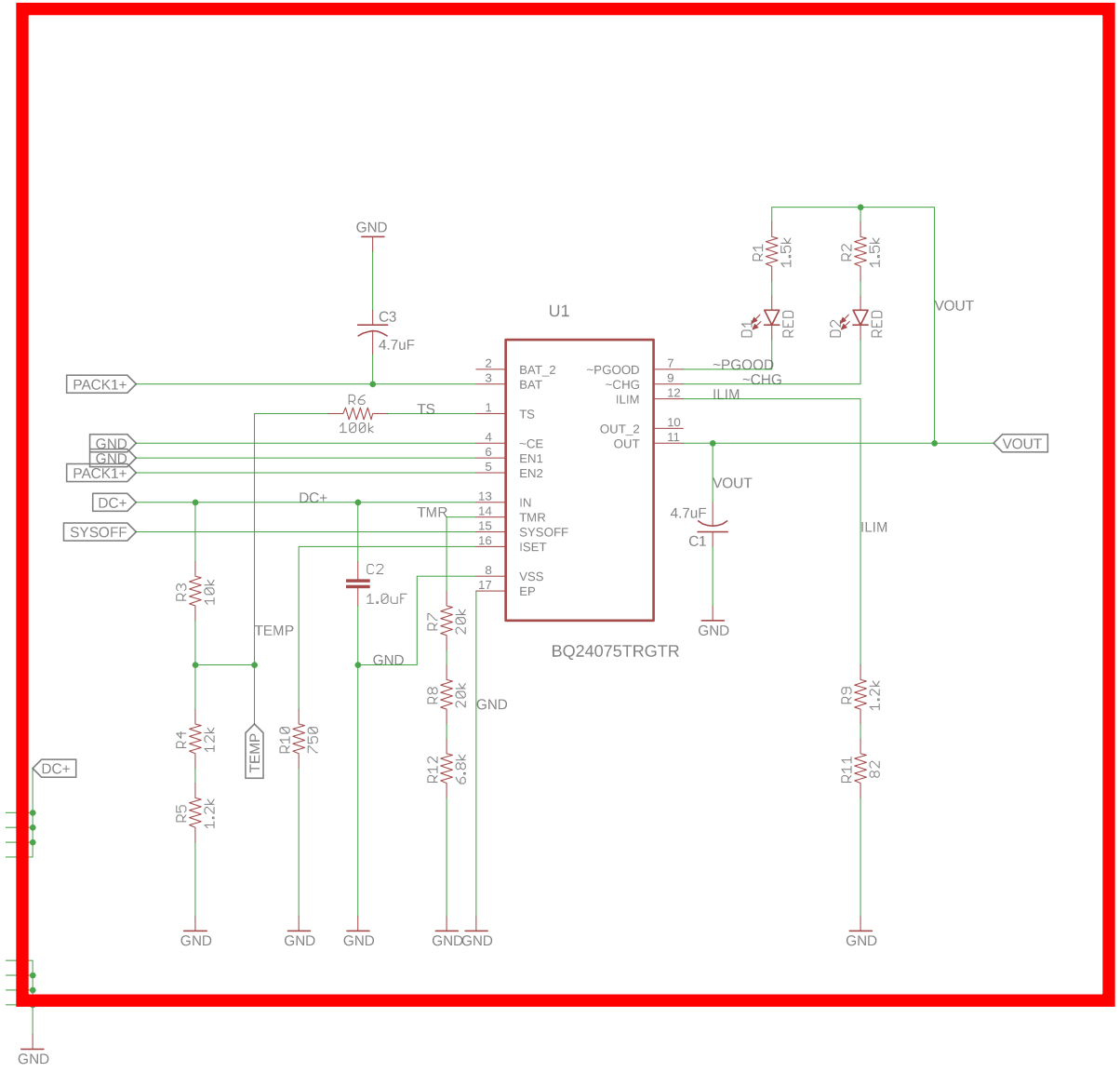

Charging Circuit

Using a 10kΩ NTC thermistor in the battery pack

- R_{HOT} = 4.086kΩ; 50°C threshold from NTC data sheet
- R_{COLD} = 28.16 kΩ; 0°C threshold from NTC data sheet
- V_{COLD} =0.25xV_{IN} =0.25x5V=1.25V
- V_{HOT}=0.125xV_{IN}=0.125x5V=0.625V

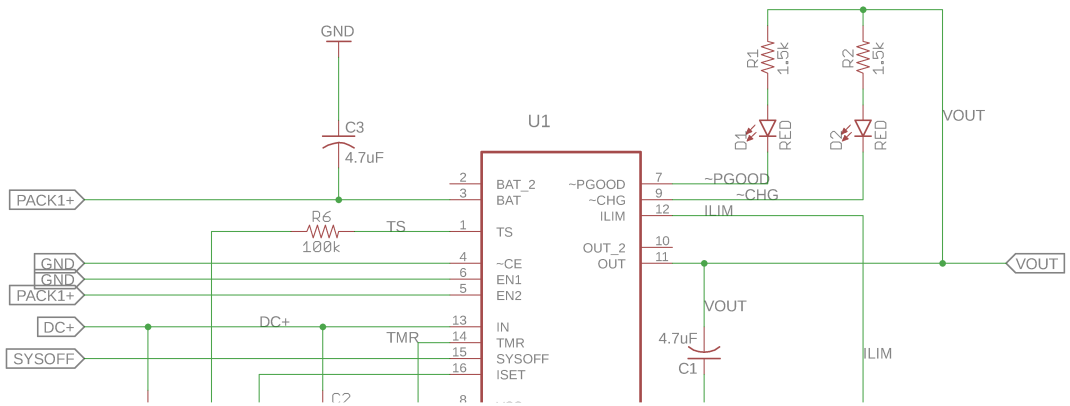

$$R7 = \frac{V_{IN} \times RCOLD \times RHOT \times \left[\frac{1}{V_{COLD}} - \frac{1}{V_{HOT}}\right]}{RHOT \times \left[\frac{V_{IN}}{V_{HOT}} - 1\right] - RCOLD \times \left[\frac{V_{IN}}{V_{COLD}} - 1\right]} = \frac{5 \times 28160 \times 4086 \times \left[\frac{1}{1.25} - \frac{1}{0.625}\right]}{4086 \times \left[\frac{5}{0.625} - 1\right] - 28160 \times \left[\frac{5}{1.25} - 1\right]} = 8.236k\Omega$$

$$R6 = \frac{\frac{V_{IN}}{V_{COLD}} - 1}{\frac{1}{R7} + \frac{1}{RCOLD}} = \frac{\frac{5}{1.25} - 1}{\frac{1}{8250} + \frac{1}{28160}} = 19.14k\Omega$$

Voltage Regulator

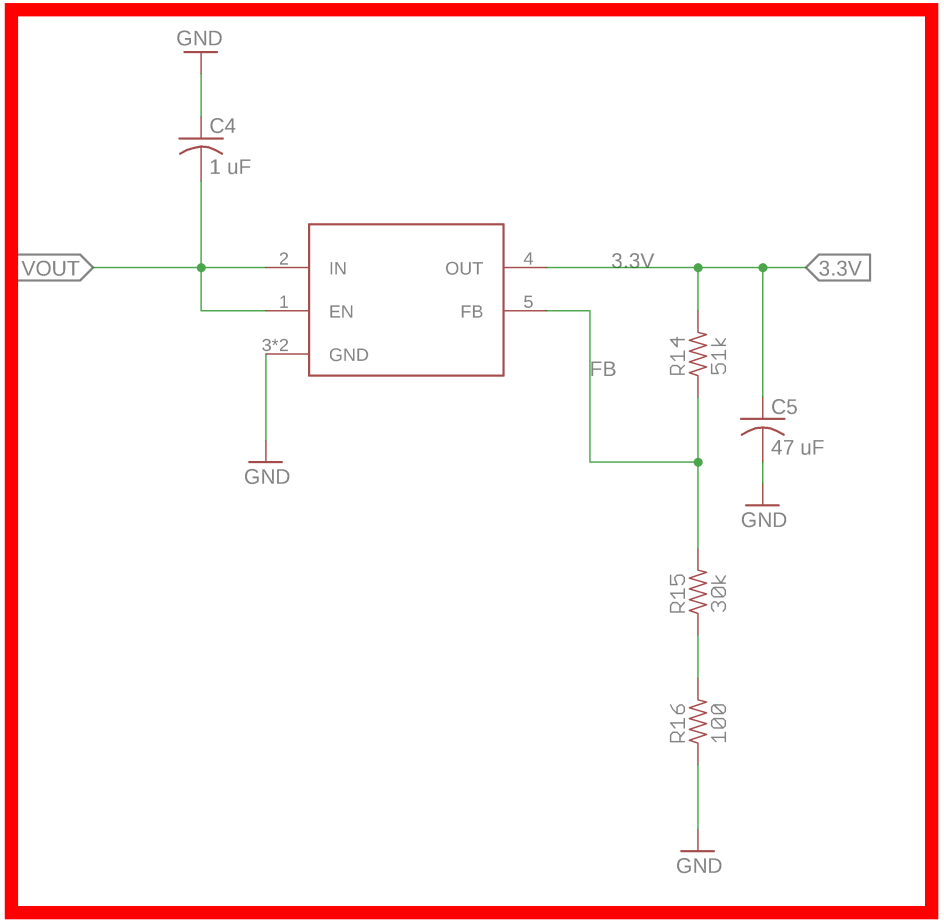

$V_{out} = V_{ref} * (1 + R1/R2)$

V_{ref} = 1.224V Internal Reference voltage

R1 = 51 KΩ

R2 = 30.1 KΩ

V_{out} = 3.3 V

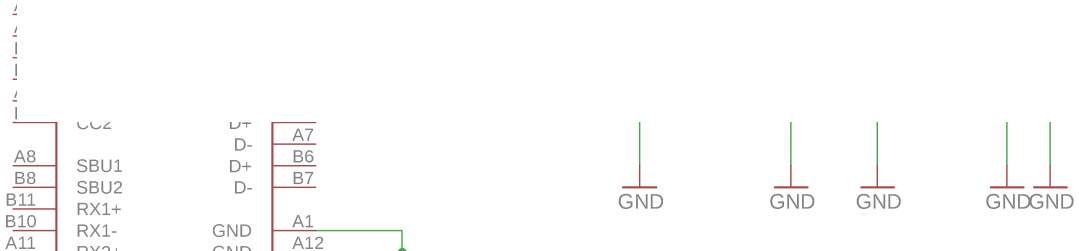

Battery Discharge

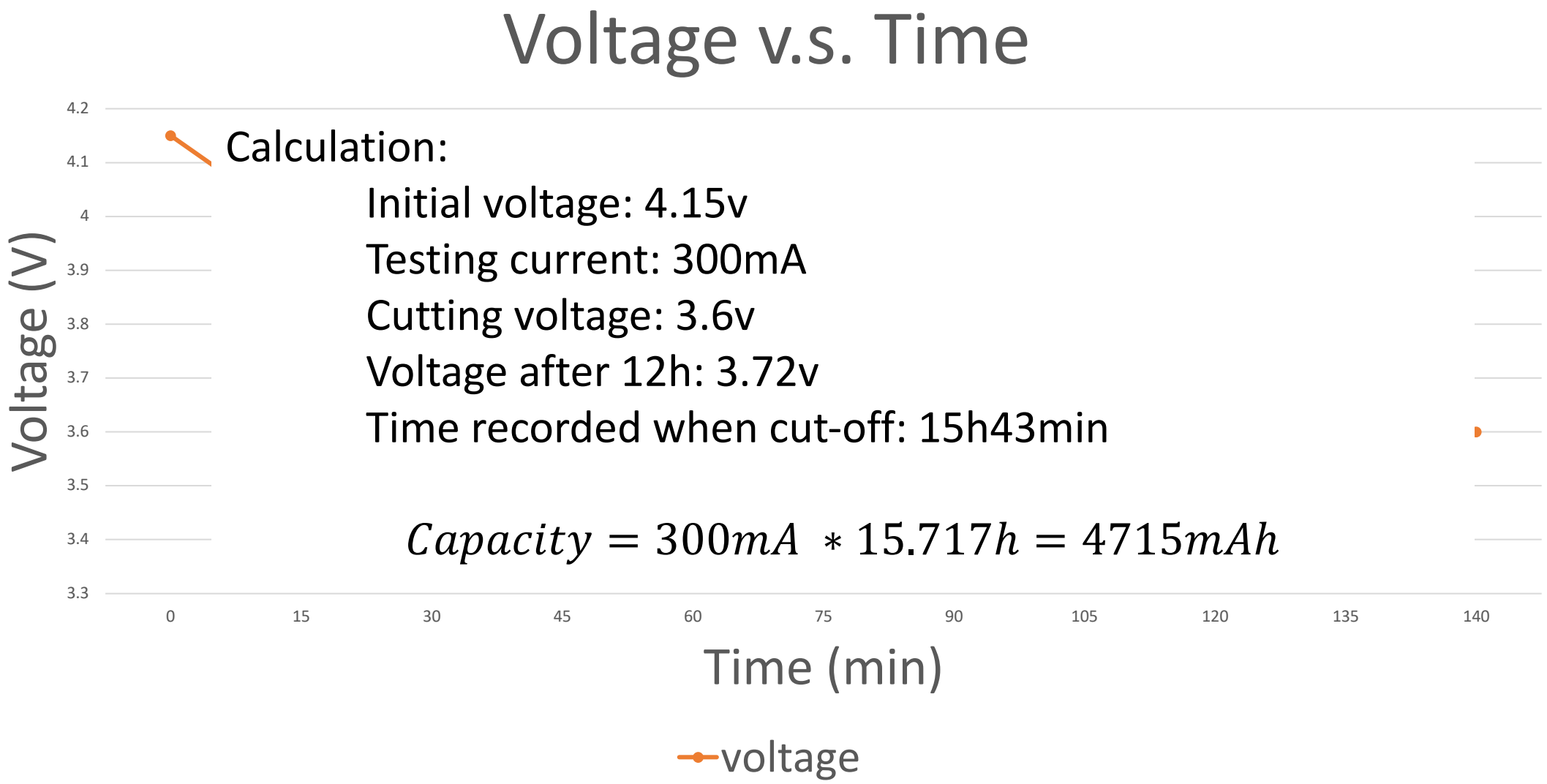

Calculation:

Initial voltage: 4.15v

Testing current: 300mA

Cutting voltage: 3.6v

Voltage after 12h: 3.72v

Time recorded when cut-off: 15h43min

$$Capacity = 300mA * 15.717h = 4715mAh$$

Battery Charging

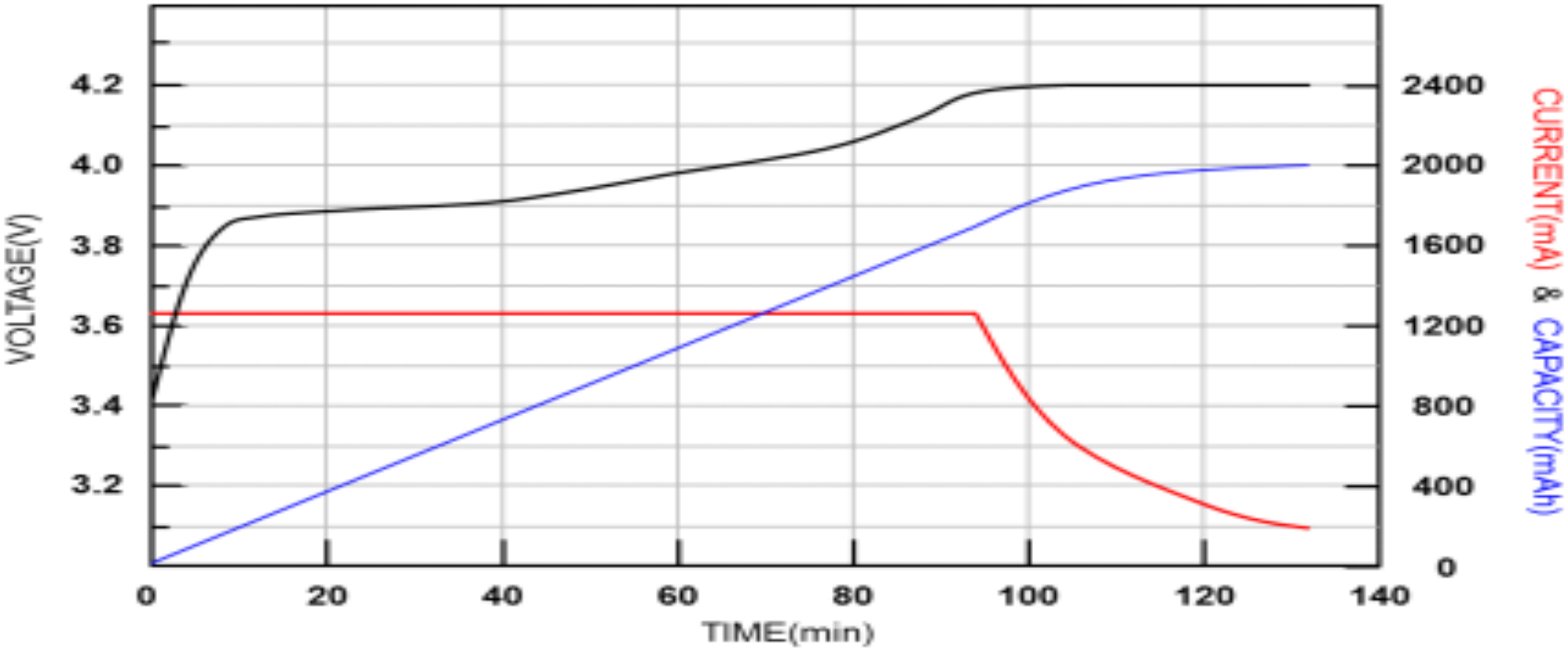

Figure 2. The charging curve of a typical lithium battery

Boost Converter

- Convert 3.3V to 5V for MCU an
  Level Shifter on Bluetooth Tx
  signal
- Internal PWM switch frequenc
  500 kHz
- Over Temperature Protection
- Over Voltage Protection

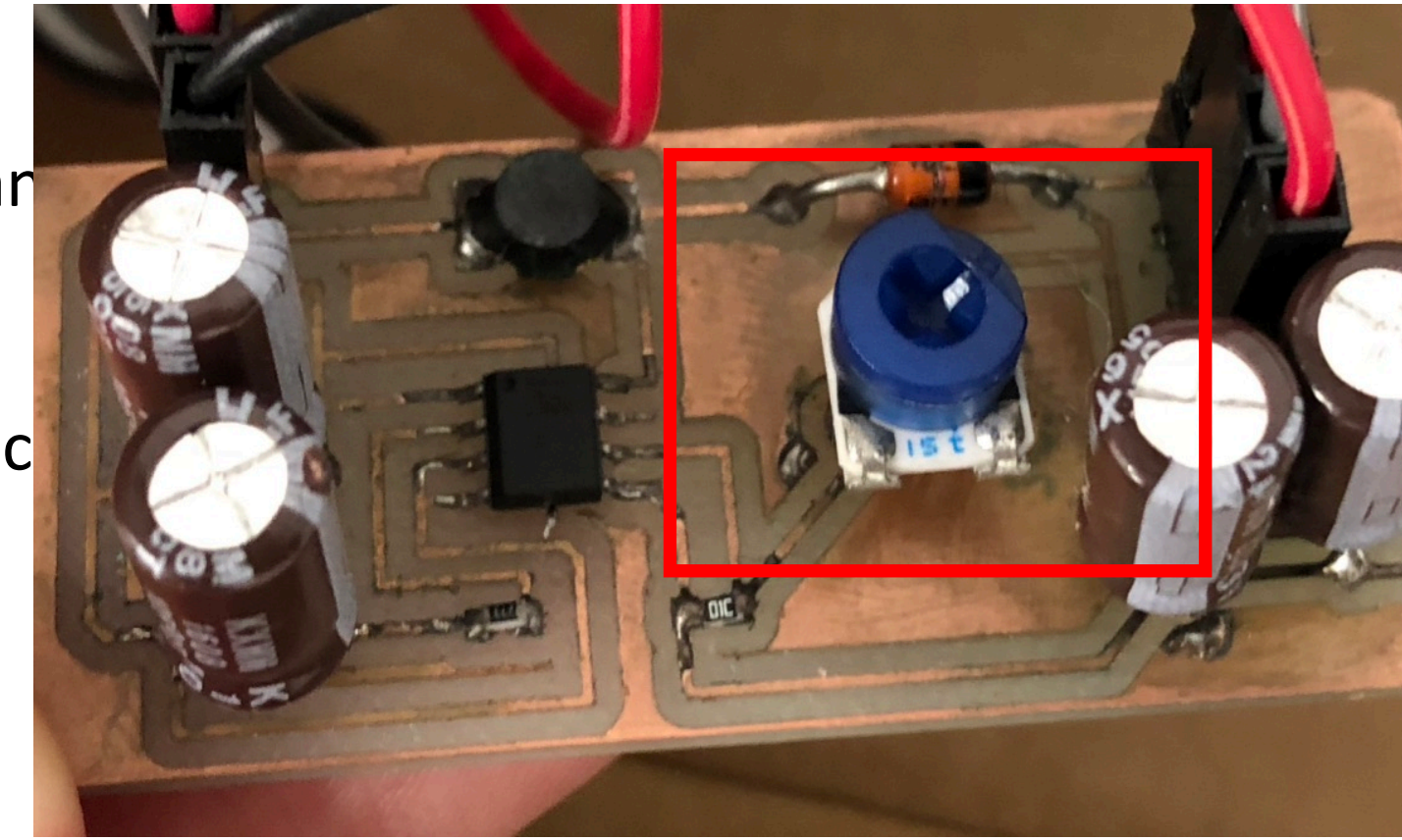

Boost Converter

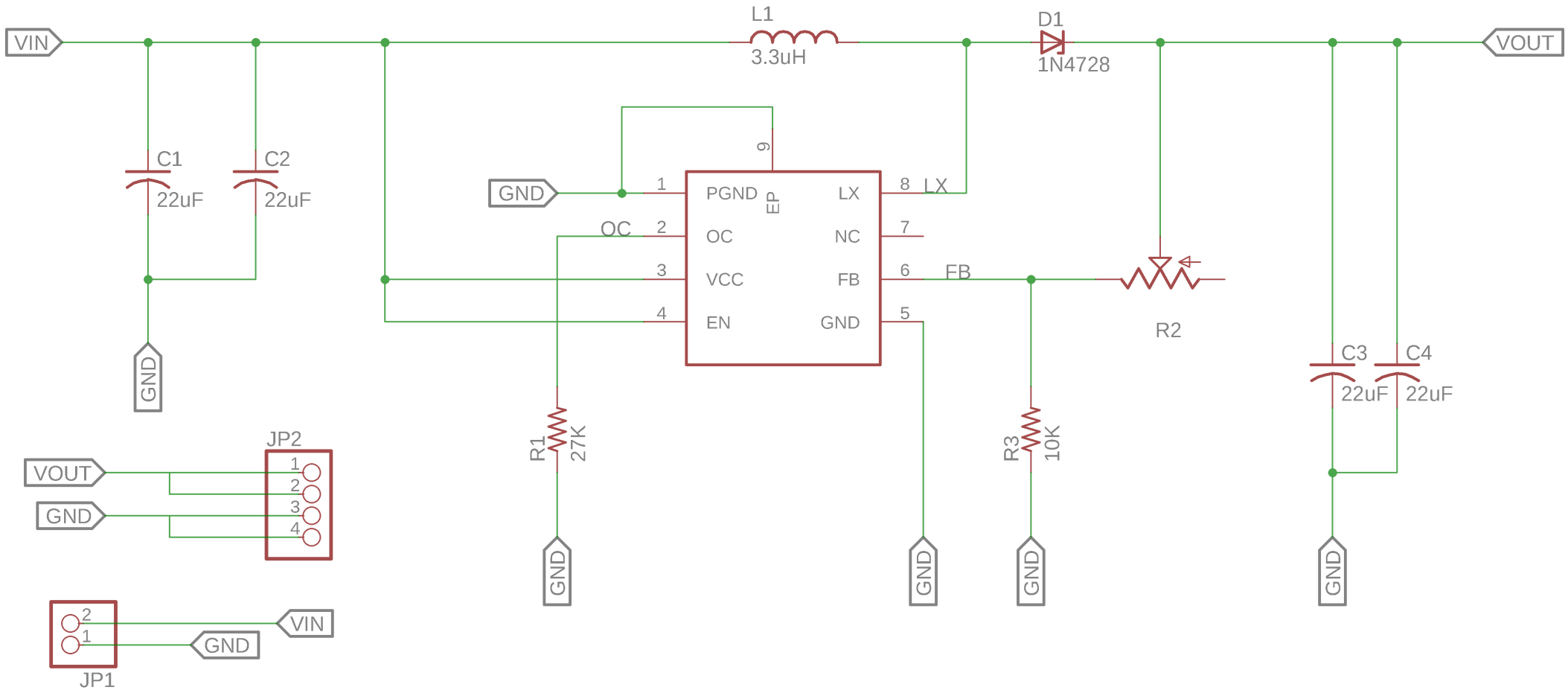

Boost Converter

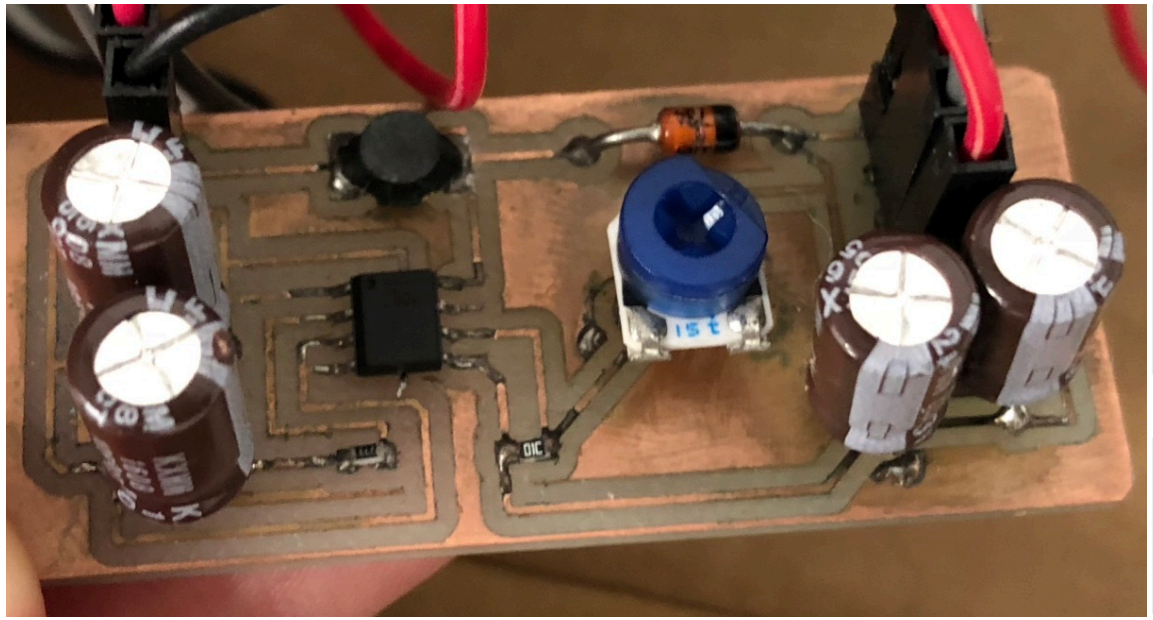

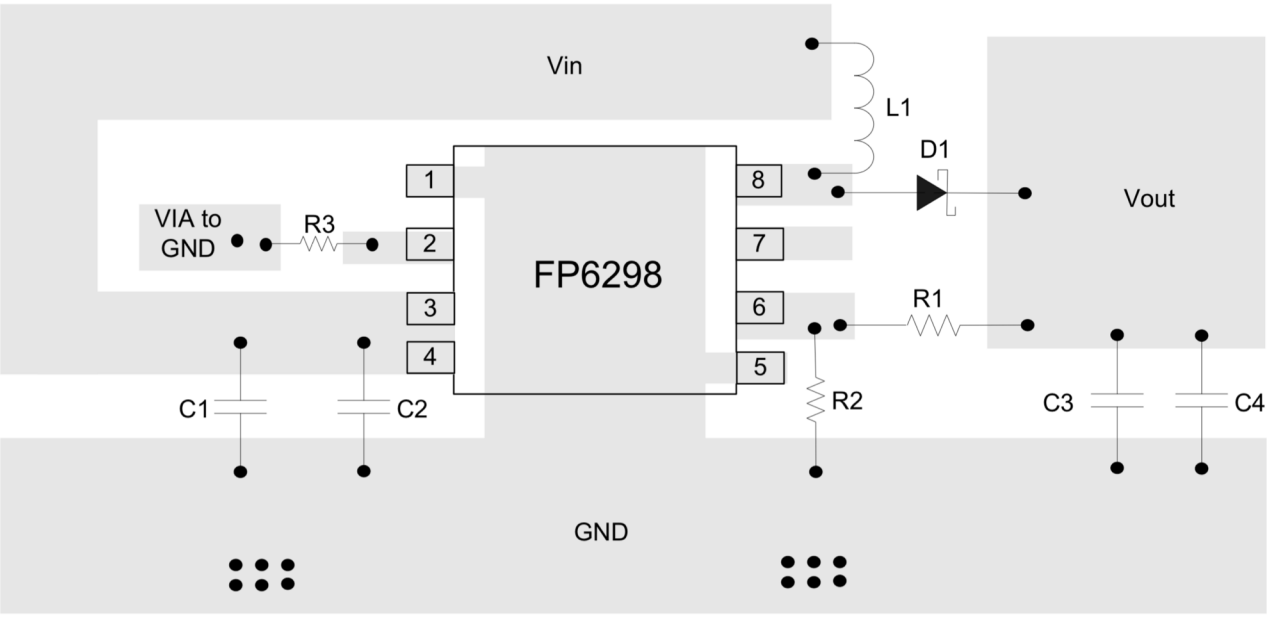

Control Module and Sensor Group

- MCU
- LED
- Button
- Buzzer
- Sensor Group

MCU

- Operates under 5V
- Collect Sensor information at 2Hz
- Work with Bluetooth module for Wi-Fi set up
- Push all sensor data to server through Wi-Fi

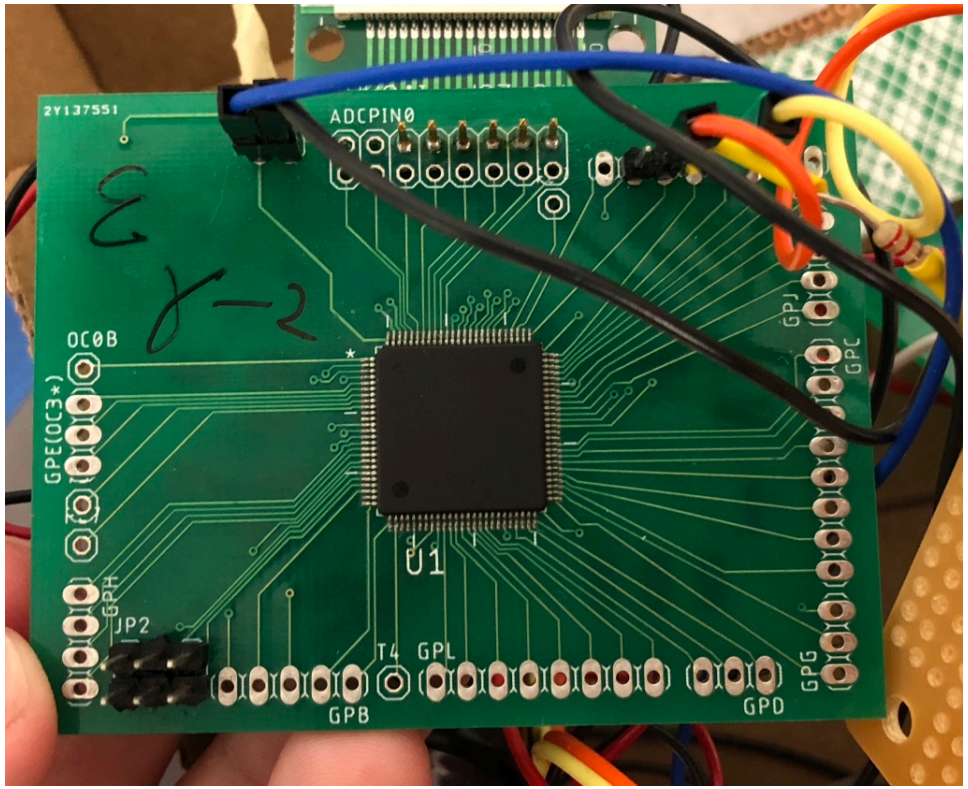

MCU

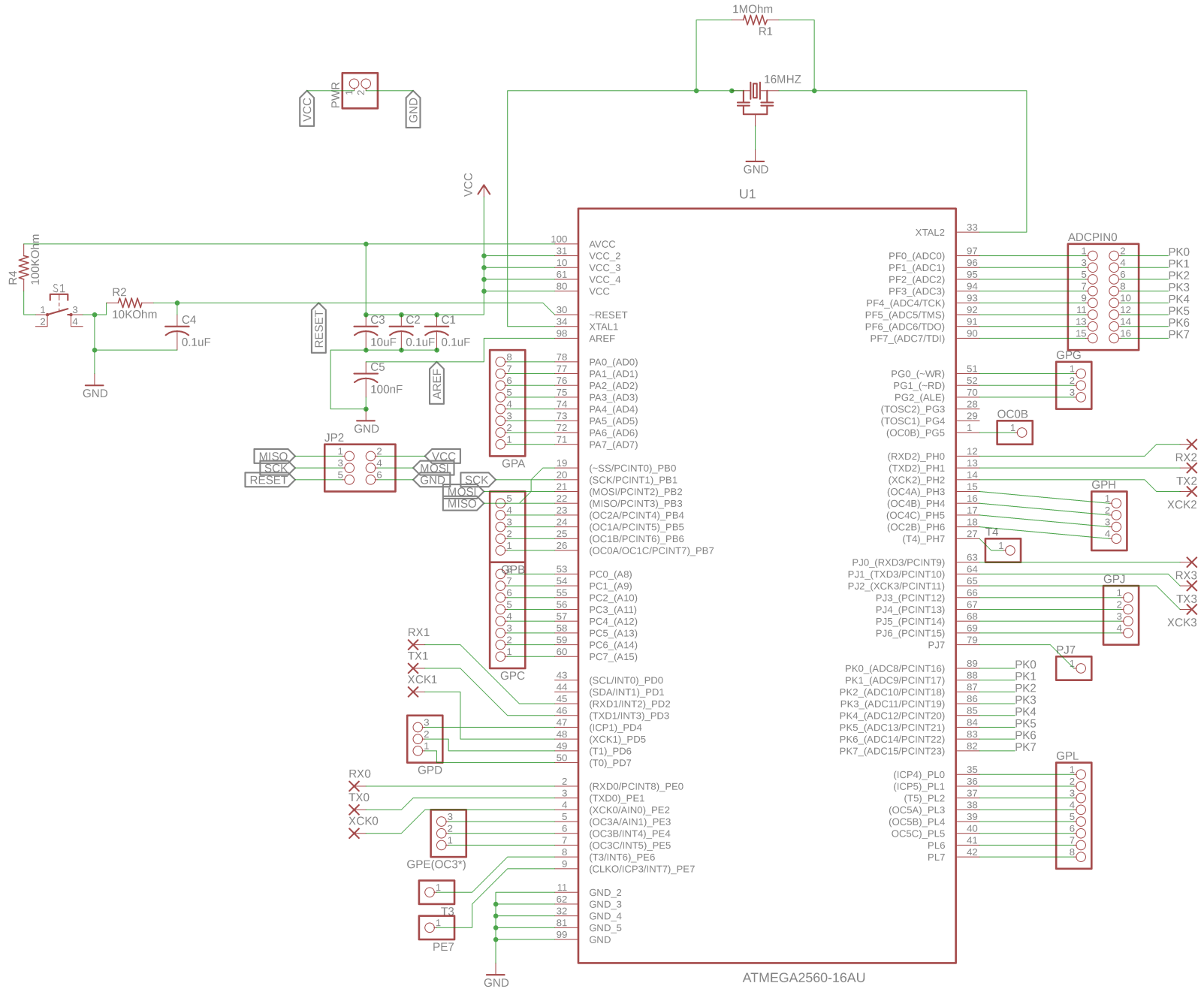
1MOhm
R1
16MHZ
GND
PWR
VCC
GND
U1
VCC
R4
100KOhm
S1
R2
10KOhm
C4
0.1uF
GND
RESET
C3
10uF
C2
0.1uF
C1
0.1uF
C5
100nF
AREF
GND
JP2
MISO
SCK
RESET
VCC
MOSI
GND
SCK
MOSI
MISO
GPA
GPB
GPC
GPD
GPE(OC3*)
T3
PE7
RX1
TX1
XCK1
RX0
TX0
XCK0
GND
AVCC
VCC_2
VCC_3
VCC_4
VCC
~RESET
XTAL1
AREF
PA0_(AD0)
PA1_(AD1)
PA2_(AD2)
PA3_(AD3)
PA4_(AD4)
PA5_(AD5)
PA6_(AD6)
PA7_(AD7)
(~SS/PCINT0)_PB0
(SCK/PCINT1)_PB1
(MOSI/PCINT2)_PB2
(MISO/PCINT3)_PB3
(OC2A/PCINT4)_PB4
(OC1A/PCINT5)_PB5
(OC1B/PCINT6)_PB6
(OC0A/OC1C/PCINT7)_PB7
PC0_(A8)
PC1_(A9)
PC2_(A10)
PC3_(A11)
PC4_(A12)
PC5_(A13)
PC6_(A14)
PC7_(A15)
(SCL/INT0)_PD0
(SDA/INT1)_PD1
(RXD1/INT2)_PD2
(TXD1/INT3)_PD3
(ICP1)_PD4
(XCK1)_PD5
(T1)_PD6
(T0)_PD7
(RXD0/PCINT8)_PE0
(TXD0)_PE1
(XCK0/AIN0)_PE2
(OC3A/AIN1)_PE3
(OC3B/INT4)_PE4
(OC3C/INT5)_PE5
(T3/INT6)_PE6
(CLKO/ICP3/INT7)_PE7
GND_2
GND_3
GND_4
GND_5
GND
XTAL2
PF0_(ADC0)
PF1_(ADC1)
PF2_(ADC2)
PF3_(ADC3)
PF4_(ADC4/TCK)
PF5_(ADC5/TMS)
PF6_(ADC6/TDO)
PF7_(ADC7/TDI)
PG0_(~WR)
PG1_(~RD)
PG2_(ALE)
(TOSC2)_PG3
(TOSC1)_PG4
(OC0B)_PG5
(RXD2)_PH0
(TXD2)_PH1
(XCK2)_PH2
(OC4A)_PH3
(OC4B)_PH4
(OC4C)_PH5
(OC2B)_PH6
(T4)_PH7
PJ0_(RXD3/PCINT9)
PJ1_(TXD3/PCINT10)
PJ2_(XCK3/PCINT11)
PJ3_(PCINT12)
PJ4_(PCINT13)
PJ5_(PCINT14)
PJ6_(PCINT15)
PJ7
PK0_(ADC8/PCINT16)
PK1_(ADC9/PCINT17)
PK2_(ADC10/PCINT18)
PK3_(ADC11/PCINT19)
PK4_(ADC12/PCINT20)
PK5_(ADC13/PCINT21)
PK6_(ADC14/PCINT22)
PK7_(ADC15/PCINT23)
(ICP4)_PL0
(ICP5)_PL1
(T5)_PL2
(OC5A)_PL3
(OC5B)_PL4
OC5C)_PL5
PL6
PL7
ADCPIN0
PK0
PK1
PK2
PK3
PK4
PK5
PK6
PK7
GPG
OC0B
RX2
TX2
XCK2
GPH
T4
RX3
TX3
XCK3
GPJ
PJ7
GPL
ATMEGA2560-16AU

MCU

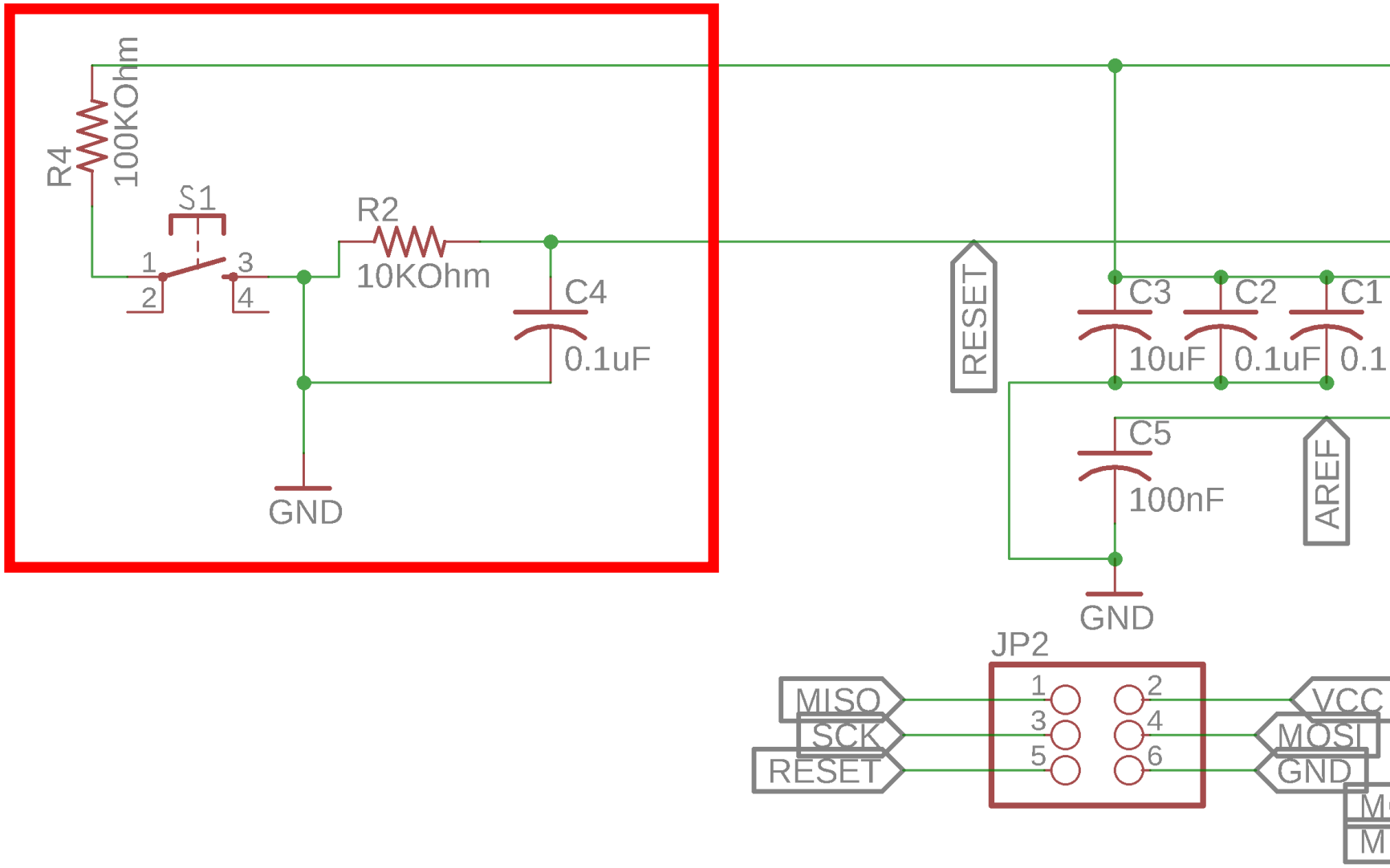
R4
100KOhm
S1
1
2
3
4
R2
10KOhm
C4
0.1uF
GND
RESET
C3
10uF
C2
0.1uF
C1
0.1
C5
100nF
GND
AREF
JP2
MISO
SCK
RESET
1
2
3
4
5
6
VCC
MOSI
GND

MCU

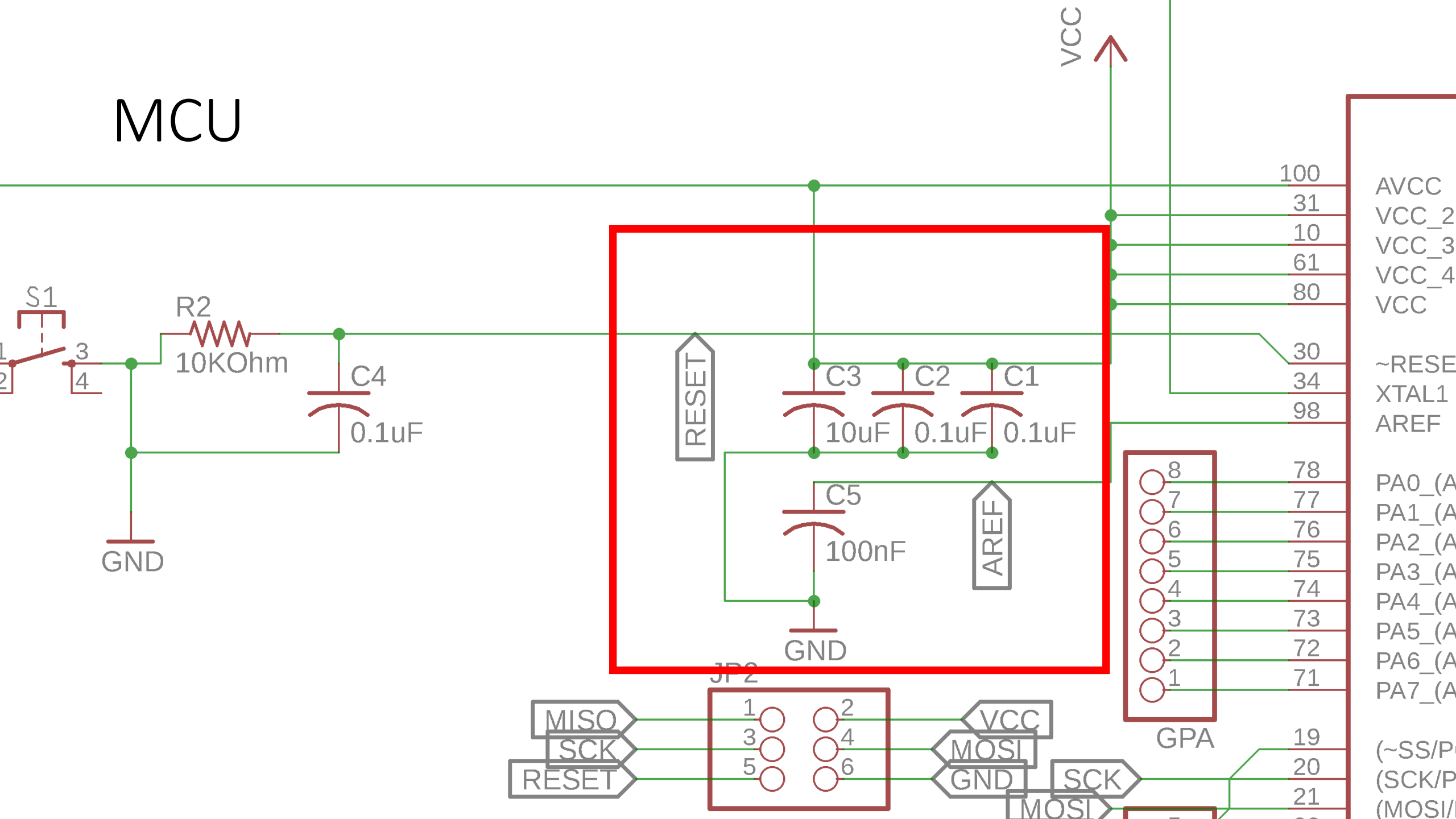
VCC
S1
R2
10KOhm
C4
0.1uF
GND
RESET
C3
C2
C1
10uF
0.1uF
0.1uF
C5
100nF
AREF
GND
JP2
MISO
SCK
RESET
VCC
MOSI
GND
SCK
MOSI
GPA
100
31
10
61
80
30
34
98
78
77
76
75
74
73
72
71
19
20
21
AVCC
VCC_2
VCC_3
VCC_4
VCC
~RESE
XTAL1
AREF
PA0_(A
PA1_(A
PA2_(A
PA3_(A
PA4_(A
PA5_(A
PA6_(A
PA7_(A
(~SS/P
(SCK/P
(MOSI/

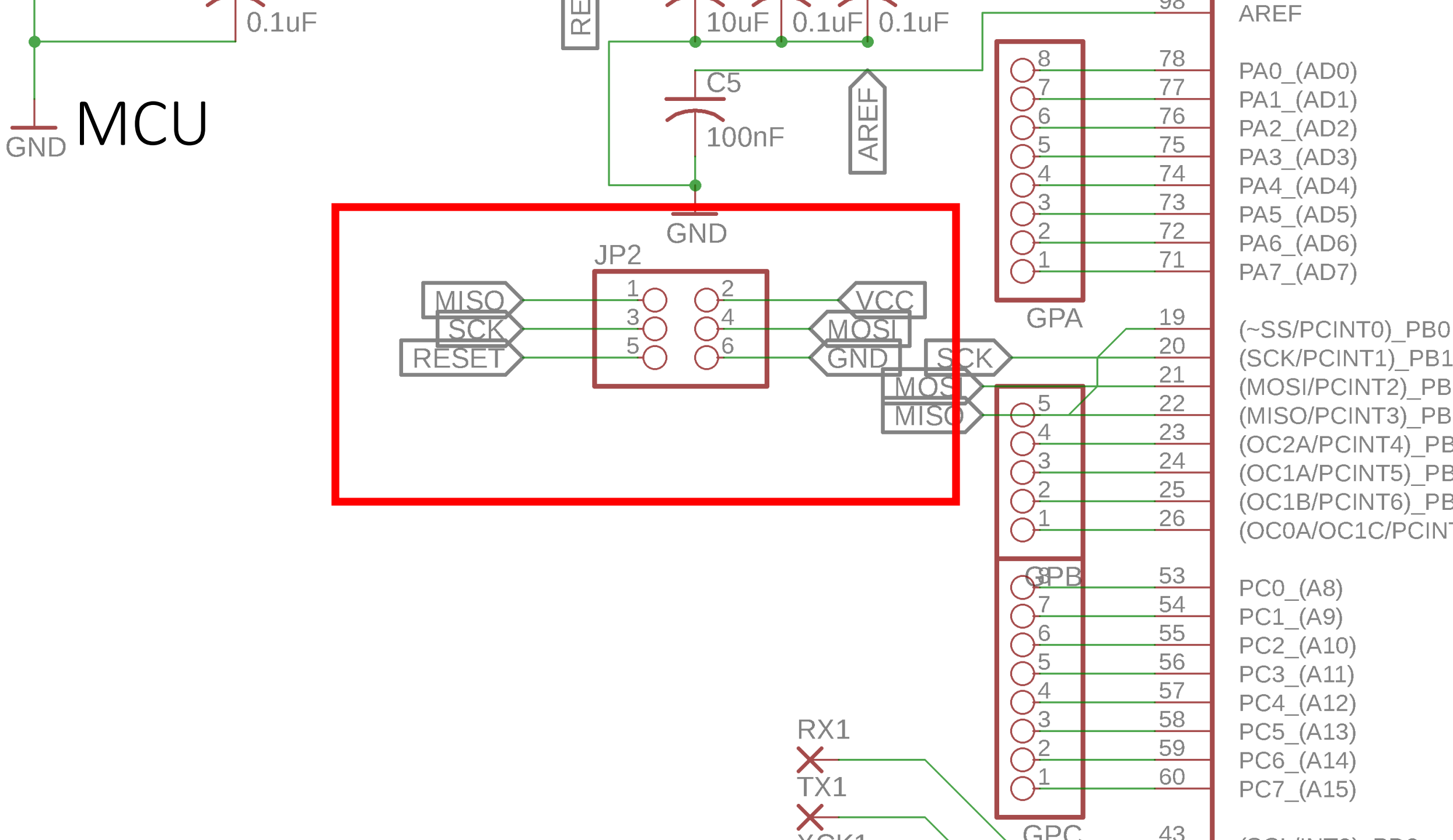
MCU
GND
0.1uF
10uF
0.1uF
0.1uF
C5
100nF
AREF
GND
JP2
MISO
SCK
RESET
VCC
MOSI
GND
SCK
MOSI
MISO
GPA
GPB
GPC
RX1
TX1
AREF
PA0_(AD0)
PA1_(AD1)
PA2_(AD2)
PA3_(AD3)
PA4_(AD4)
PA5_(AD5)
PA6_(AD6)
PA7_(AD7)
(~SS/PCINT0)_PB0
(SCK/PCINT1)_PB1
(MOSI/PCINT2)_PB
(MISO/PCINT3)_PB
(OC2A/PCINT4)_PB
(OC1A/PCINT5)_PB
(OC1B/PCINT6)_PB
(OC0A/OC1C/PCIN
PC0_(A8)
PC1_(A9)
PC2_(A10)
PC3_(A11)
PC4_(A12)
PC5_(A13)
PC6_(A14)
PC7_(A15)

Sensor Group

- 4 Flex Sensor
- 2 Photo Sensor
- Central Hub

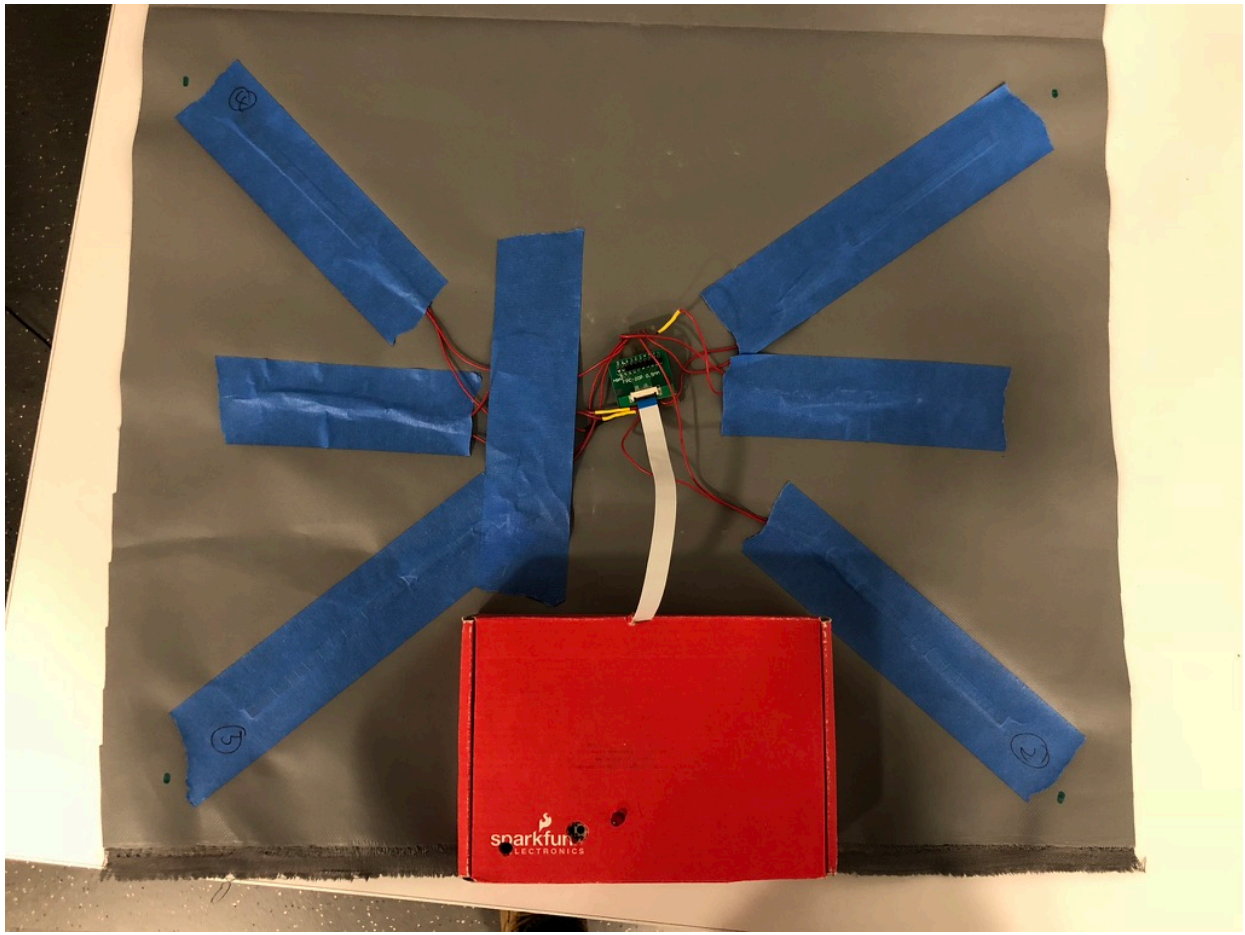

Sensor Group

- 4 Flex Sensor
- 2 Photo Sensor
- Central Hub

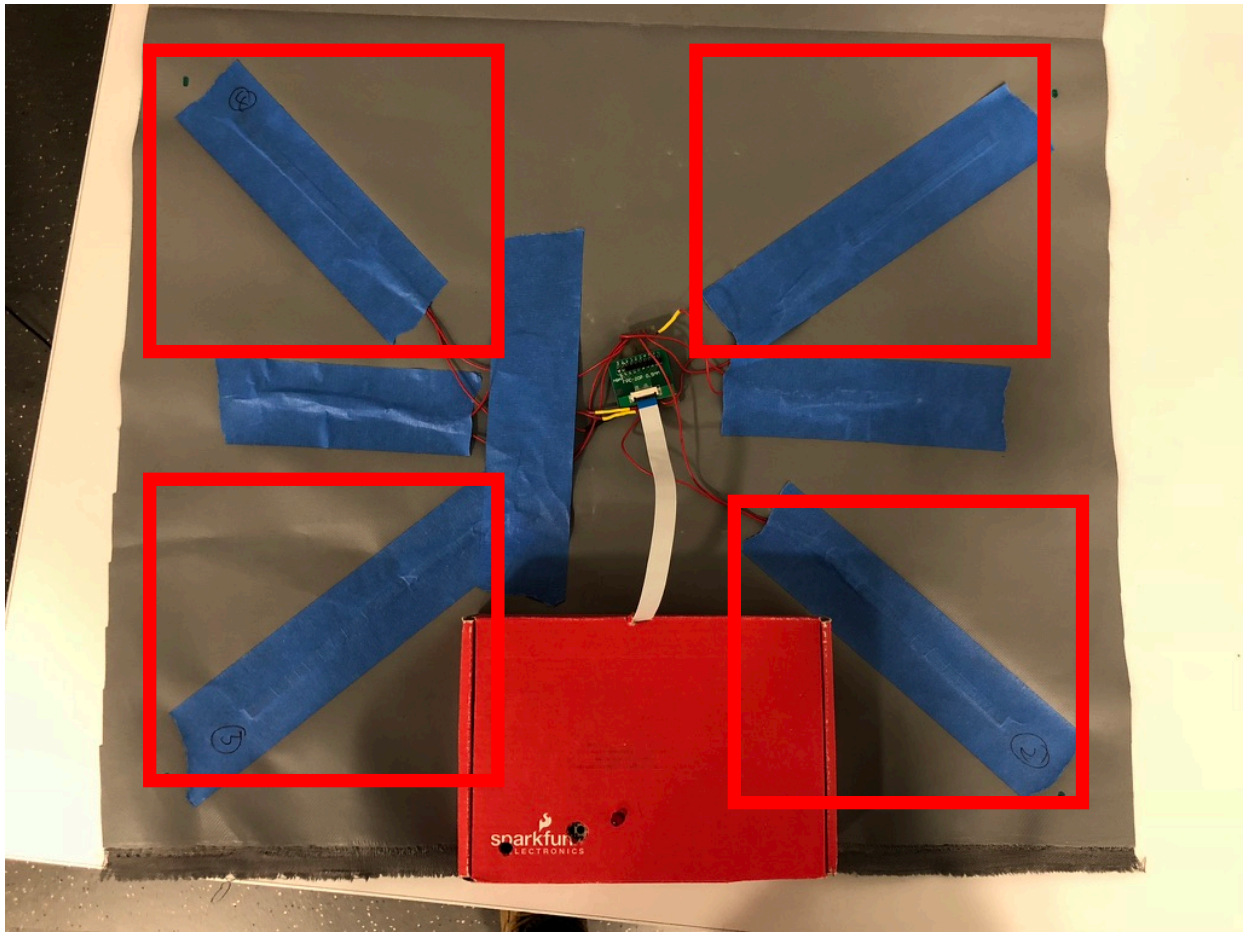

Sensor Group

- 4 Flex Sensor
- 2 Photo Sensor
- Central Hub

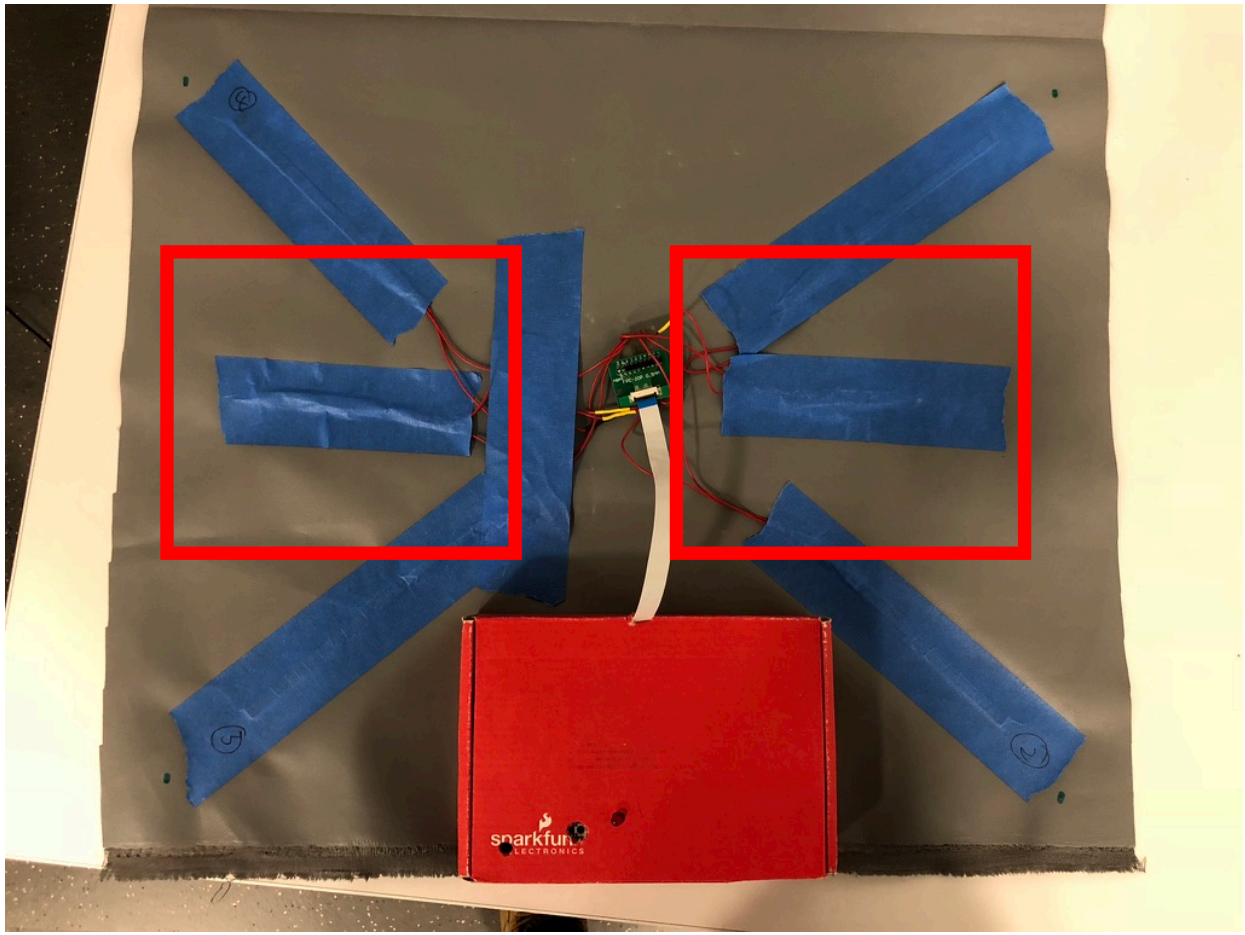

Sensor Group

- 4 Flex Sensor
- 2 Photo Sensor
- Central Hub
  - Easy to expand

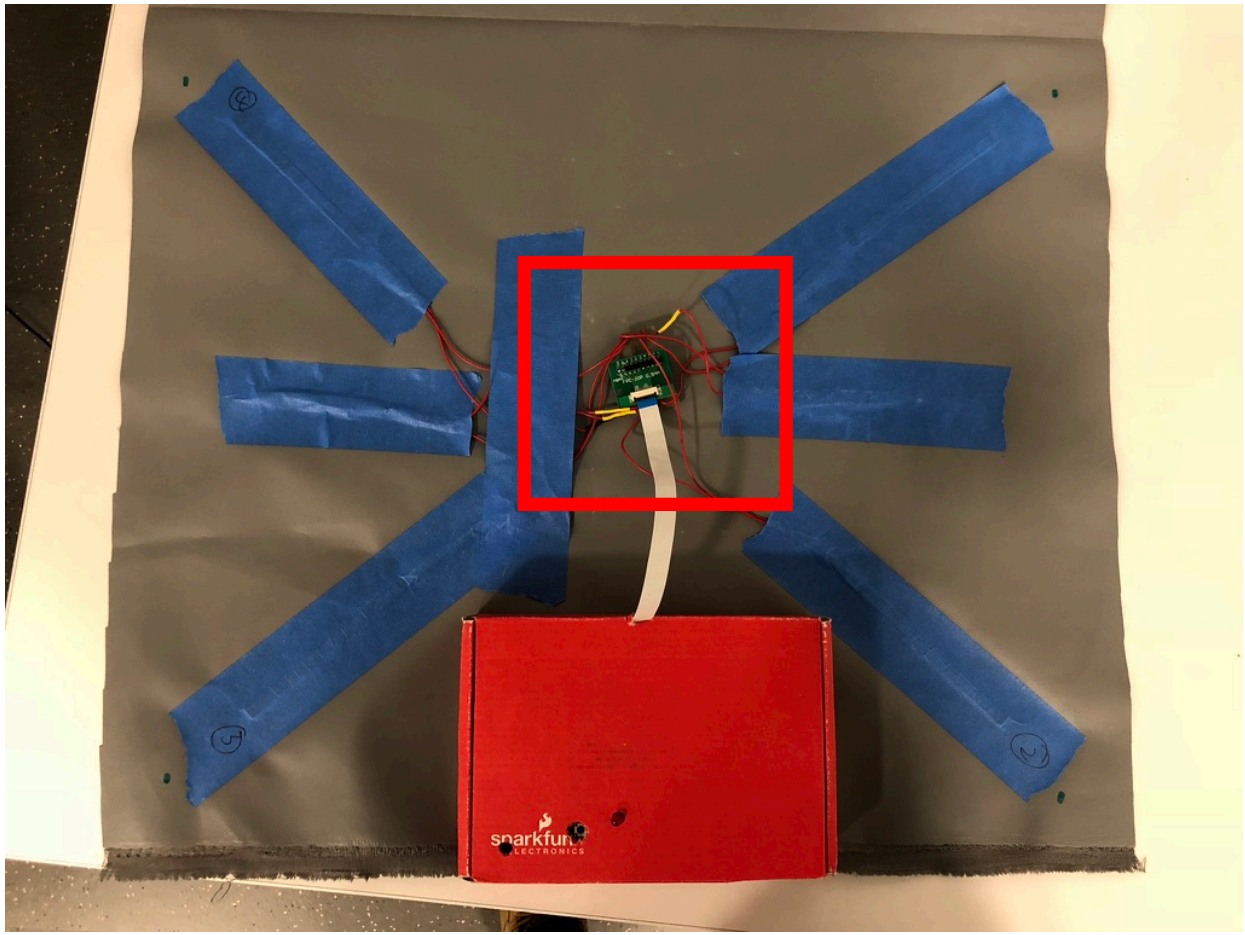

Sensor Group

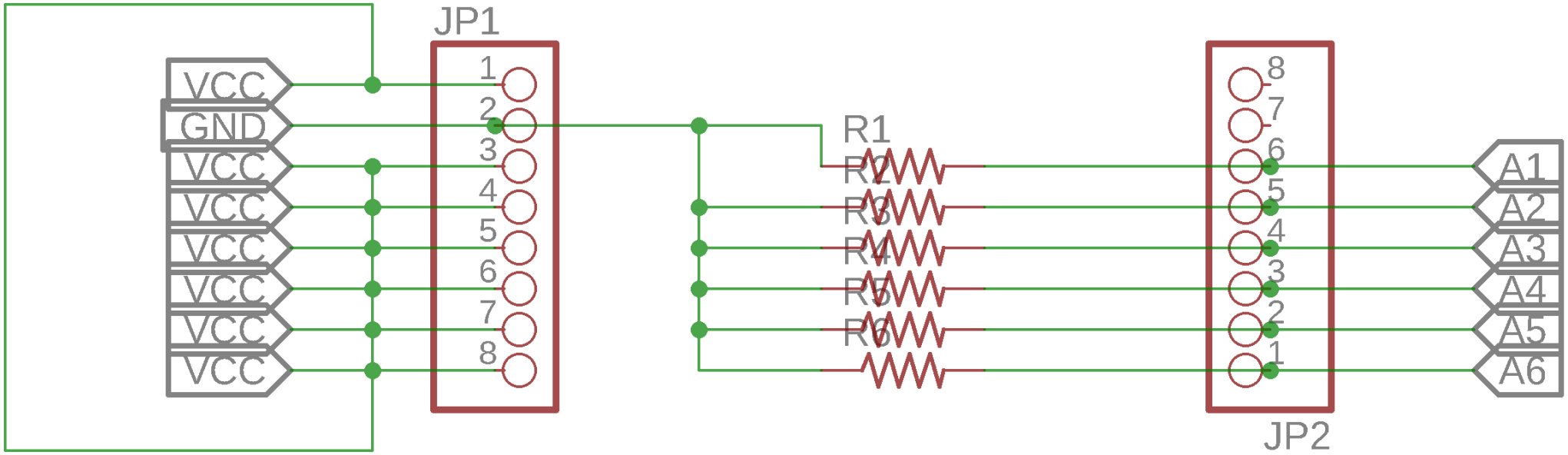

Sensor Group

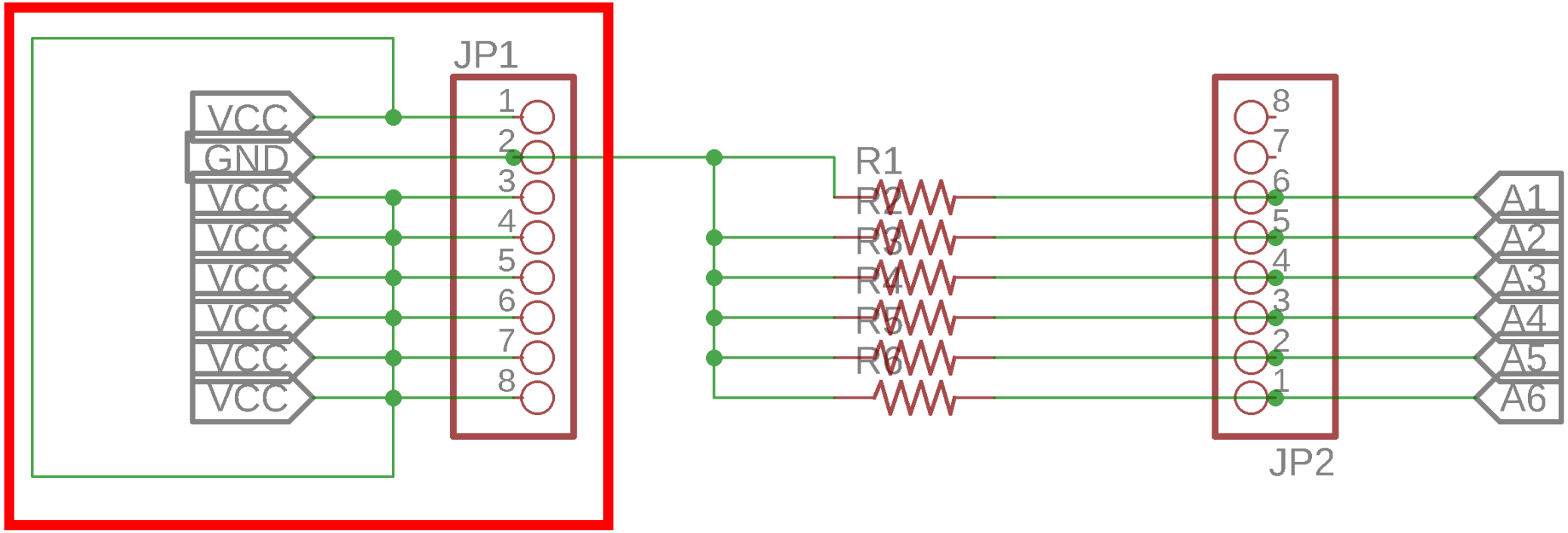

Sensor Group

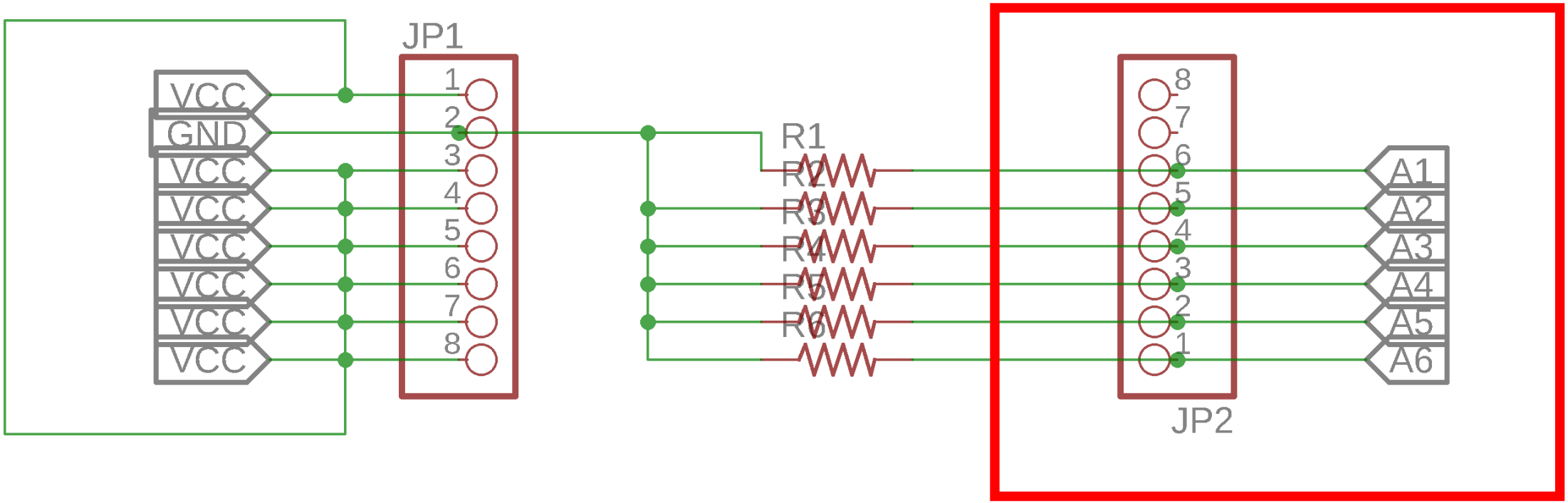

Communication Modules

- Bluetooth Module
- Wi-Fi Module

Bluetooth Module

- 3.3 V Operation
- Fully configurable through UART
- Lower power deep sleep mode

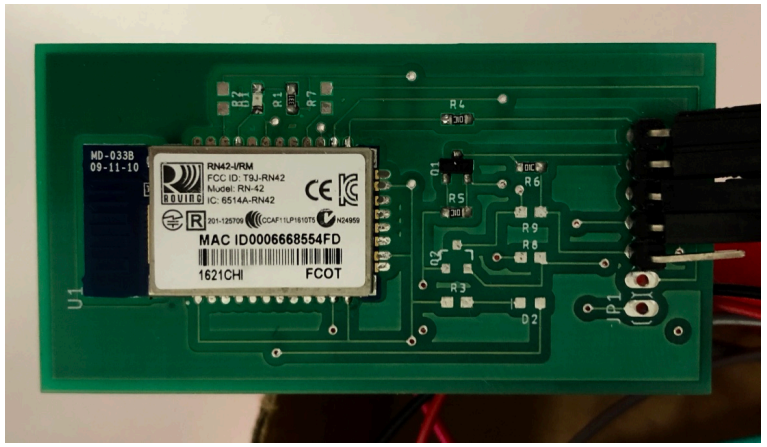

Bluetooth Module

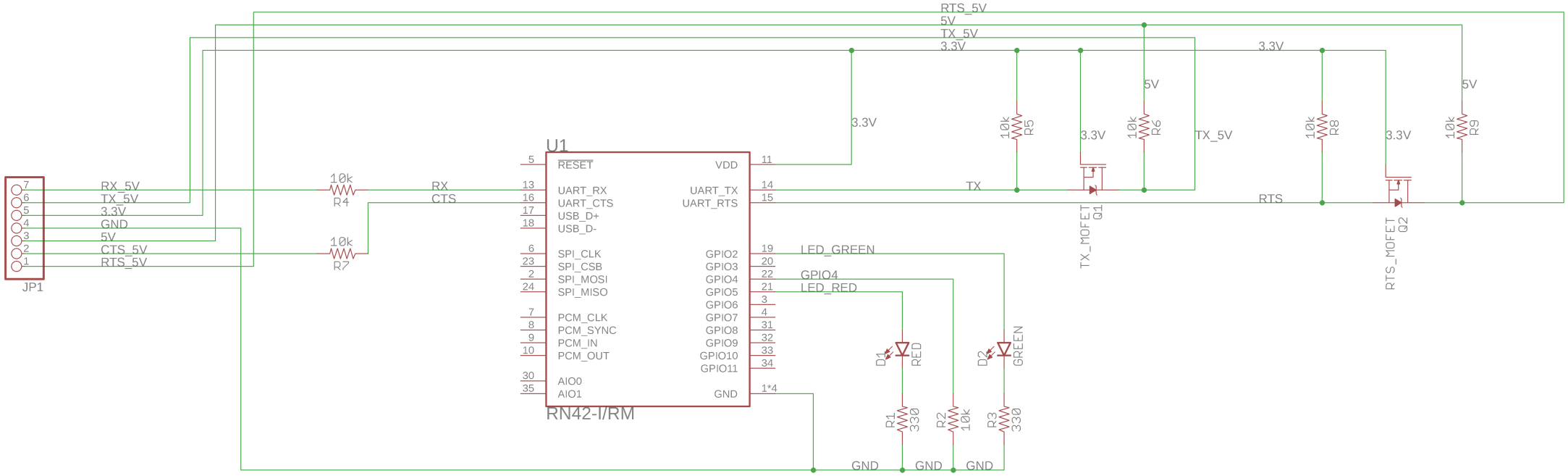

Bluetooth Module

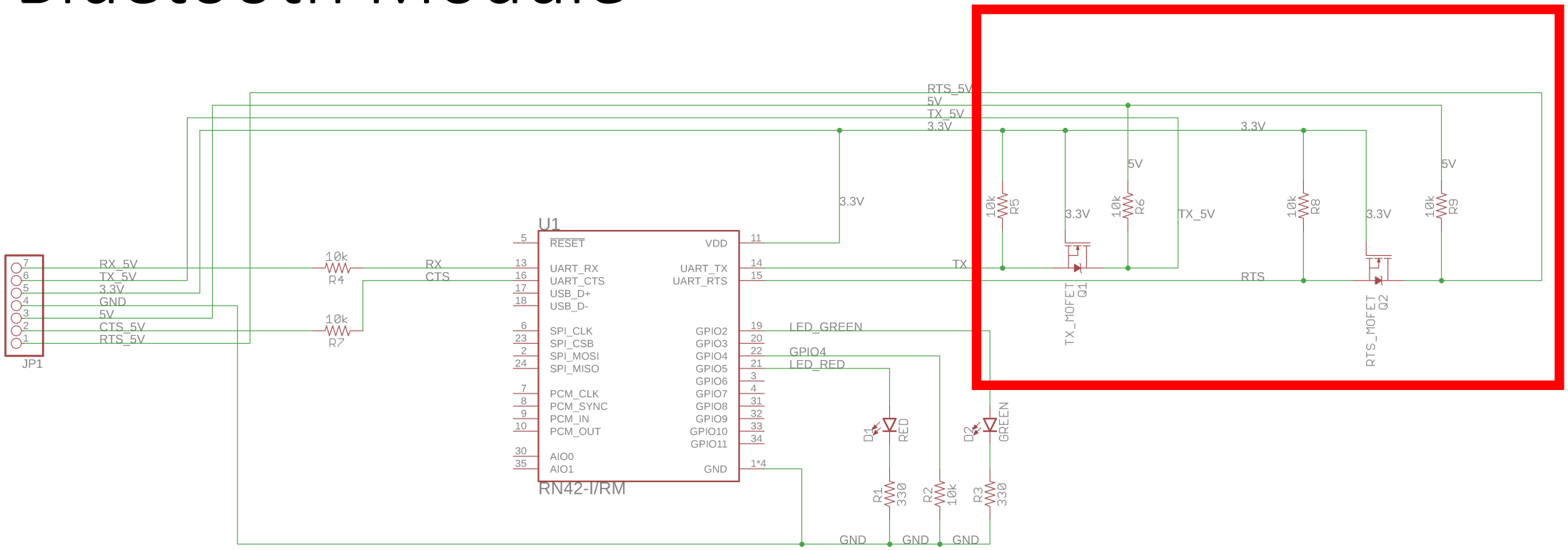

Wi-Fi Module

- 802.11 b/g/n
- Wi-Fi Direct (P2P), soft-AP, station
- Integrated TCP/IP protocol stack
  - HTTP stack on top
- Robust asynchronous IO tunnel
  - Information transmission protocol

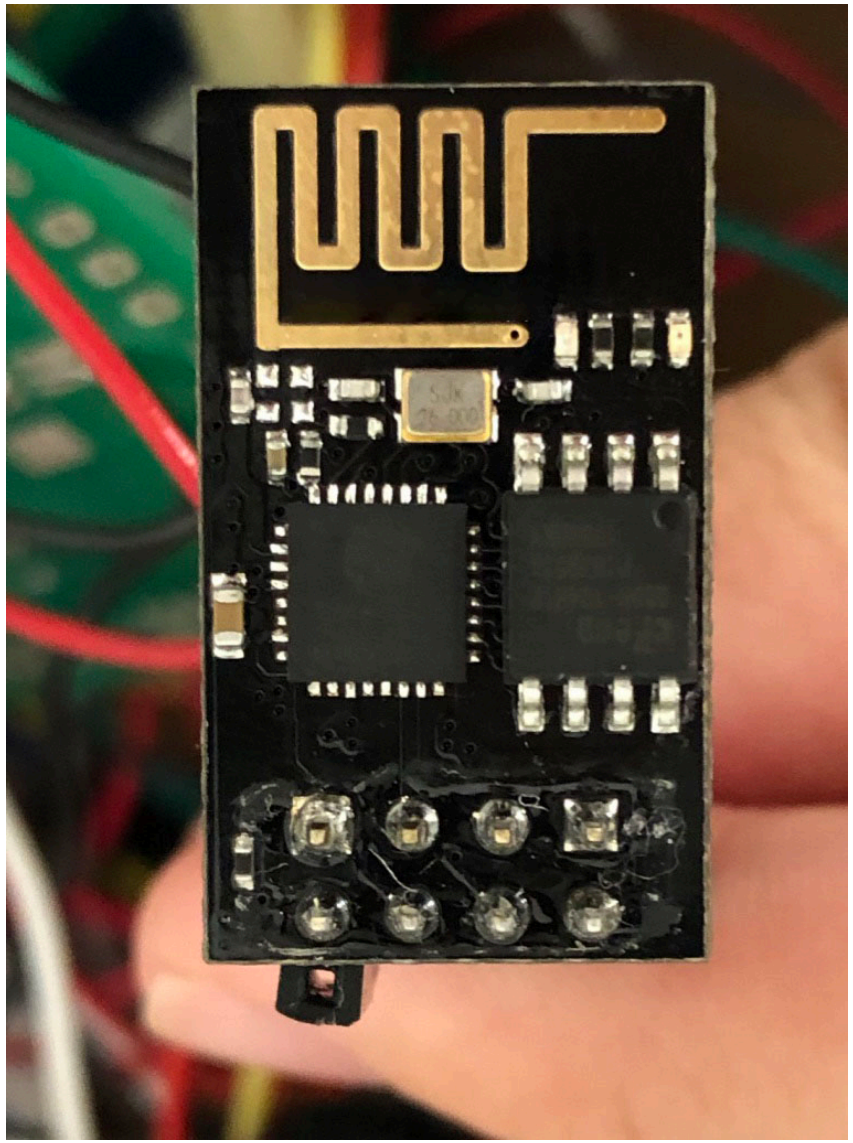

Software

- Android application and website
- Central Server

Android Application

- Pair with the Bluetooth module to setup Wi-Fi
- Adjust blanket sensitivity
- Monitor through webpage

Android Application

- Pair with the Bluetooth module to setup Wi-Fi
- Adjust blanket sensitivity
- Monitor through webpage

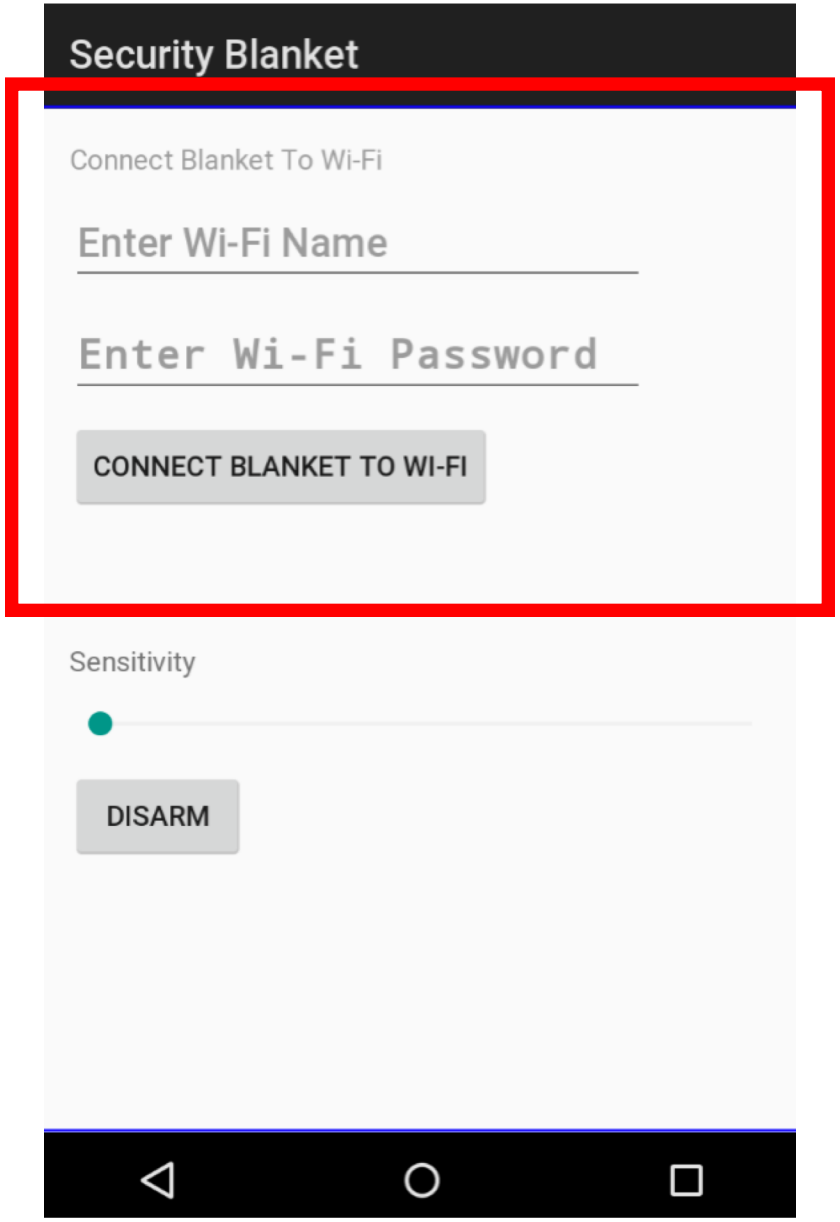

Android Application

- Pair with the Bluetooth module to setup Wi-Fi
- Adjust blanket sensitivity
- Monitor through webpage

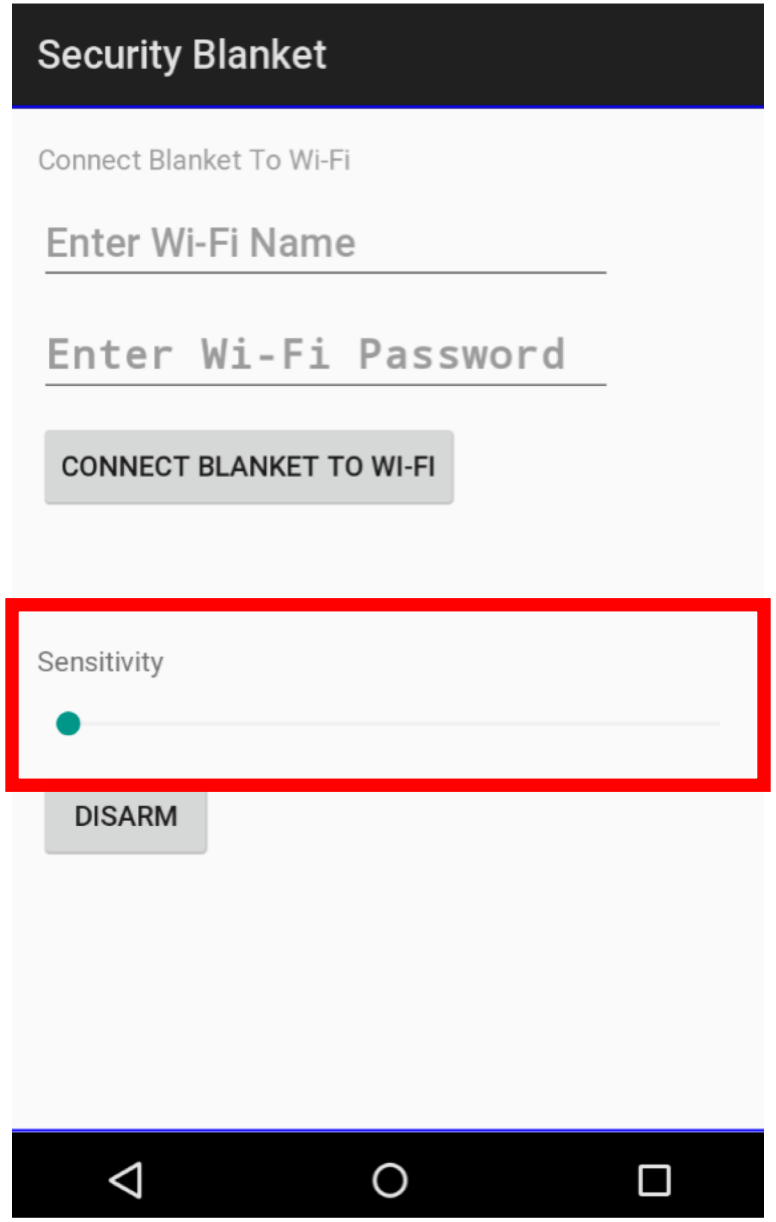

Android Application

- Pair with the Bluetooth module to setup Wi-Fi
- Adjust blanket sensitivity
- Monitor through webpage

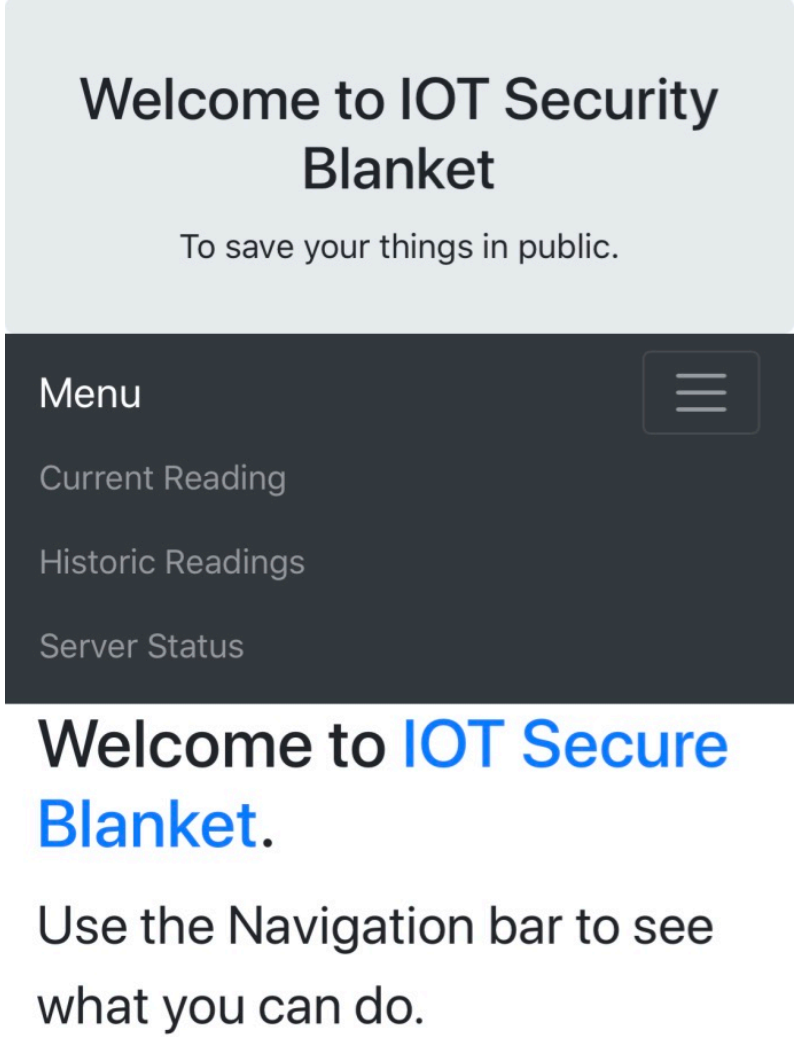

Android Application

- Pair with the Bluetooth module to setup Wi-Fi
- Adjust blanket sensitivity
- Monitor through webpage

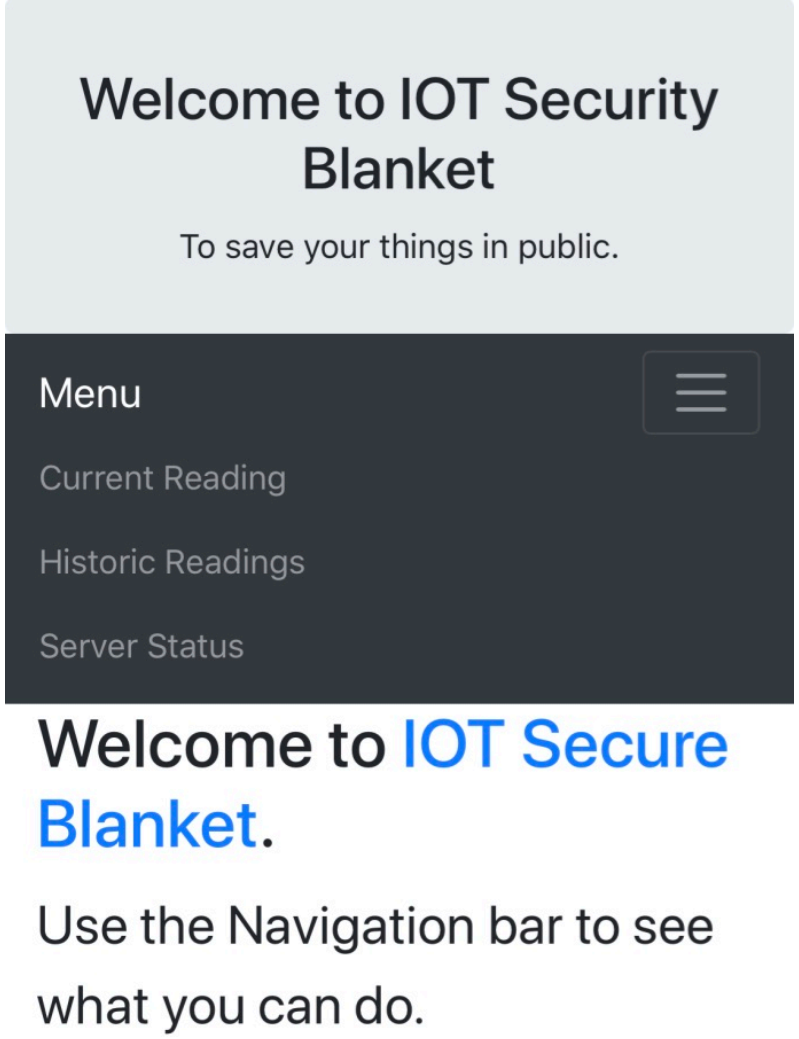

Android Application

- Pair with the Bluetooth module to setup Wi-Fi
- Adjust blanket sensitivity
- Monitor through webpage

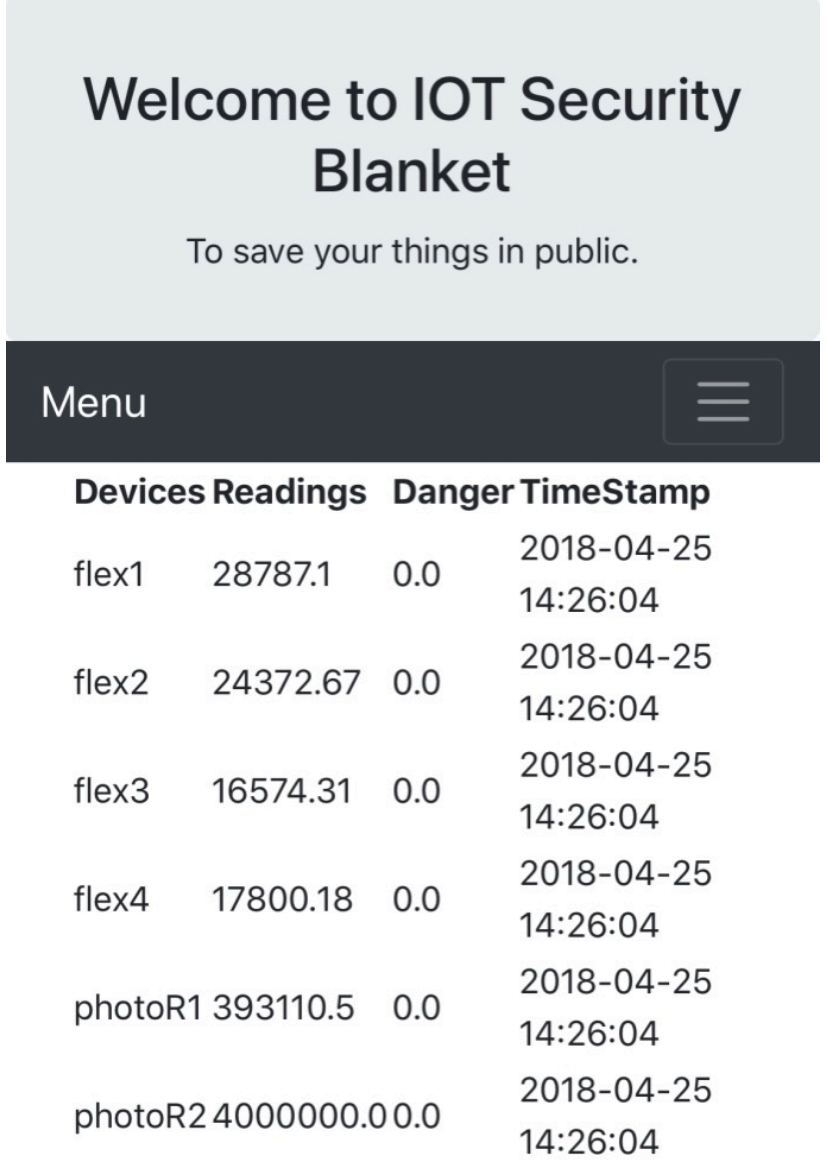

Devices	Readings	Danger	TimeStamp
flex1	28787.1	0.0	2018-04-25 14:26:04
flex2	24372.67	0.0	2018-04-25 14:26:04
flex3	16574.31	0.0	2018-04-25 14:26:04
flex4	17800.18	0.0	2018-04-25 14:26:04
photoR1	393110.5	0.0	2018-04-25 14:26:04
photoR2	4000000.0	0.0	2018-04-25 14:26:04

Android Application

- Pair with the Bluetooth module to setup Wi-Fi
- Adjust blanket sensitivity
- Monitor through webpage

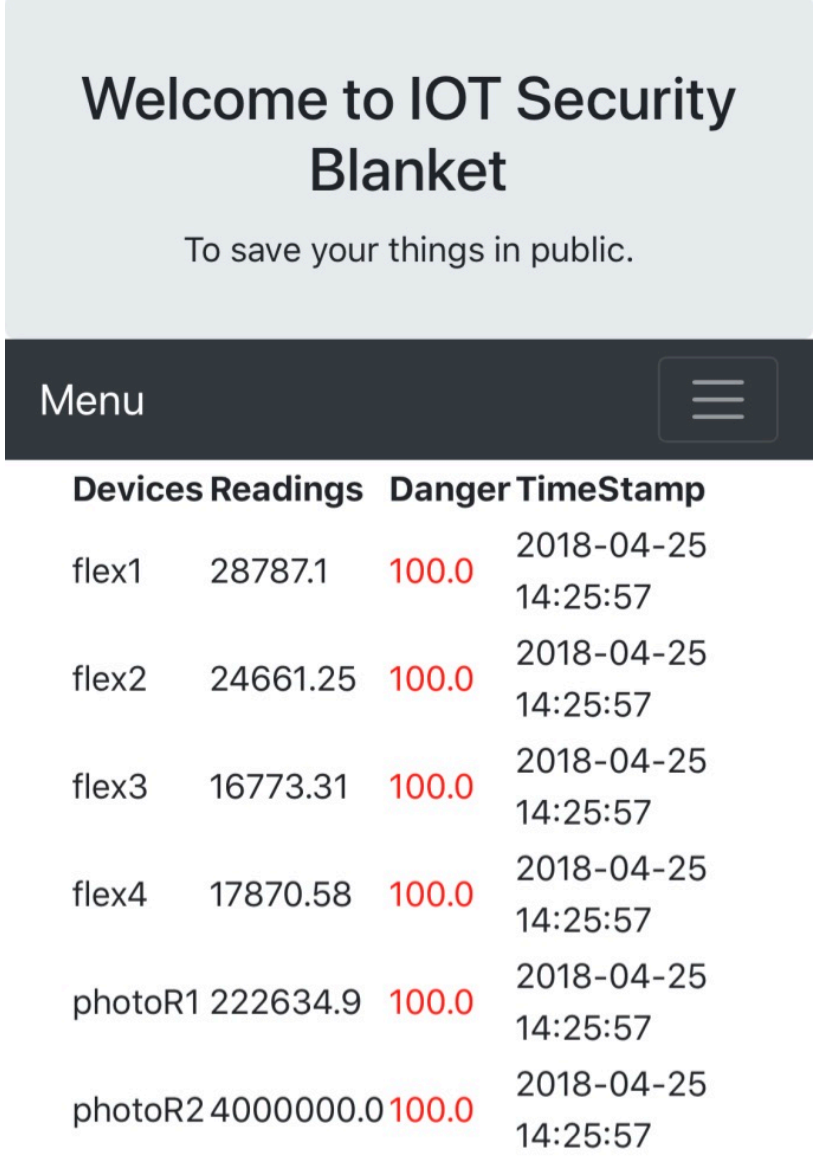

Devices	Readings	Danger	TimeStamp
flex1	28787.1	100.0	2018-04-25 14:25:57
flex2	24661.25	100.0	2018-04-25 14:25:57
flex3	16773.31	100.0	2018-04-25 14:25:57
flex4	17870.58	100.0	2018-04-25 14:25:57
photoR1	222634.9	100.0	2018-04-25 14:25:57
photoR2	4000000.0	100.0	2018-04-25 14:25:57

Server

- Python implementation
- Windows based
- SQLite database structure
- Potentials:
  - API requests
  - Visualization
  - Token verification
  - Parameter tuning
  - Function enable/disable
  - Massive data collection
  - Machine learning

Cinch Module (Phased Out)

- Potential choke hazard
- Breaks sensors
- One time usage

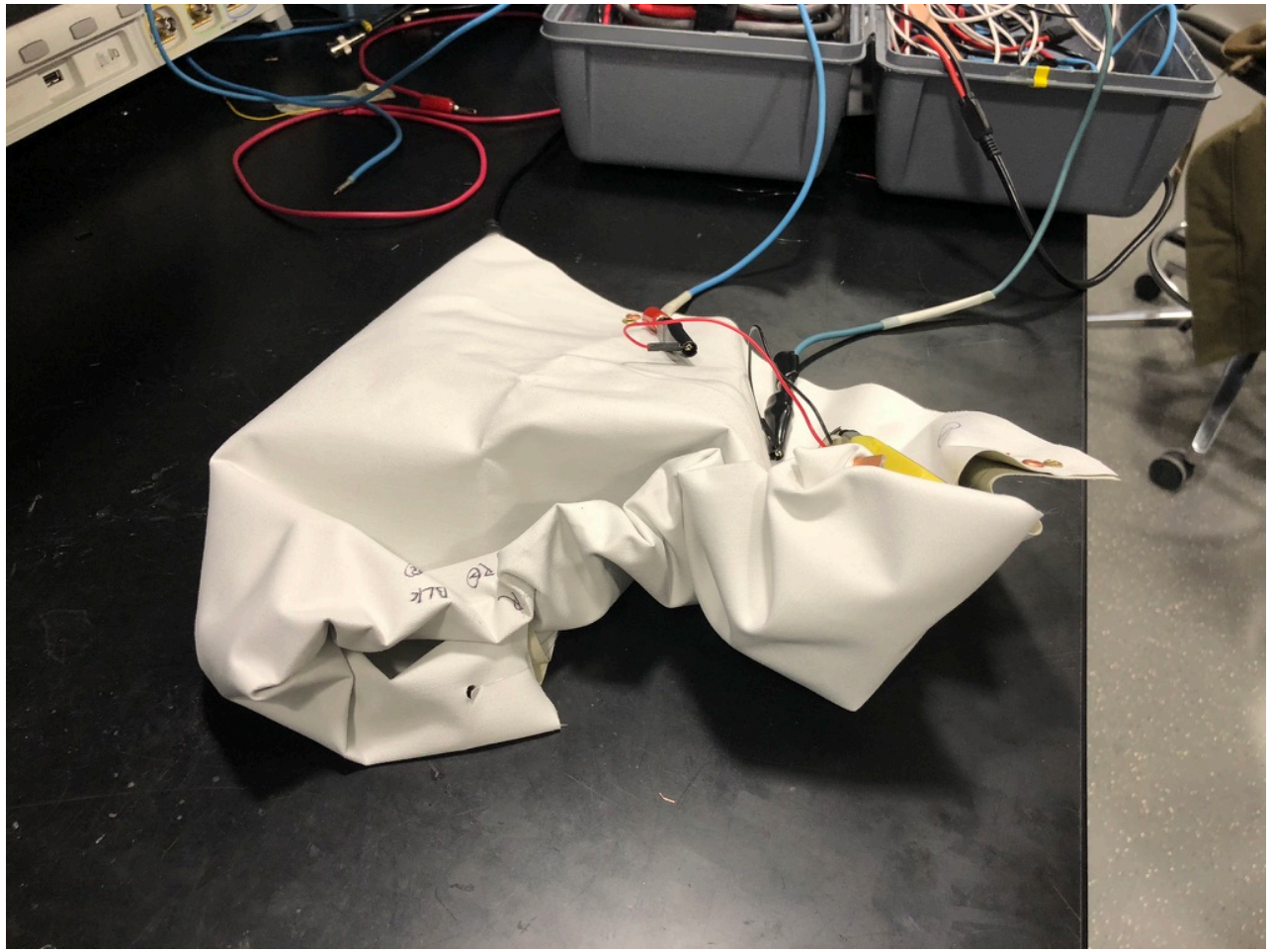

Future Hardware Development

- Unified PCB design
- 3D printed case
- No button operation

Future Software Development

- Push notification
- Live socket connection
- Blanket status visualization

Thank You