Conservative electromagnetic systems

Flux & current relations

$$\lambda = \lambda(i, x), \;\; i = i(\lambda, x)$$

Voltage of mechanical origin

$$v = \frac{\partial \lambda}{\partial i}\frac{\mathrm{d}i}{\mathrm{d}t} + \frac{\partial \lambda}{\partial x}\frac{\mathrm{d}x}{\mathrm{d}t}$$

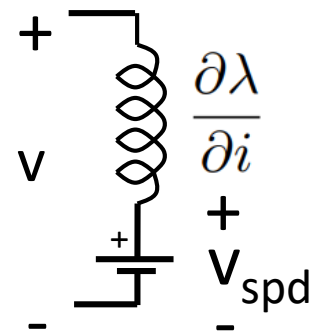

Energy & Co-energy

$$\text{Co-energy} = \int_0^i \lambda(i', x)\,\mathrm{d}i'$$

function of current

$$\text{Energy} = \int_0^\lambda i(\lambda', x)\,\mathrm{d}\lambda'$$

function of flux

$$\text{Co-energy}(i, x) = \lambda i - \text{Energy}(\lambda, x)$$

Force of electric origin

(direction of <u>increasing</u> x)

$$f^e = +\frac{\partial}{\partial x}[\text{Co-energy}] = -\frac{\partial}{\partial x}[\text{Energy}]$$

$$\lambda = +\frac{\partial}{\partial i}[\text{Co-energy}]$$

$$i = \frac{\partial}{\partial \lambda}[\text{Energy}]$$

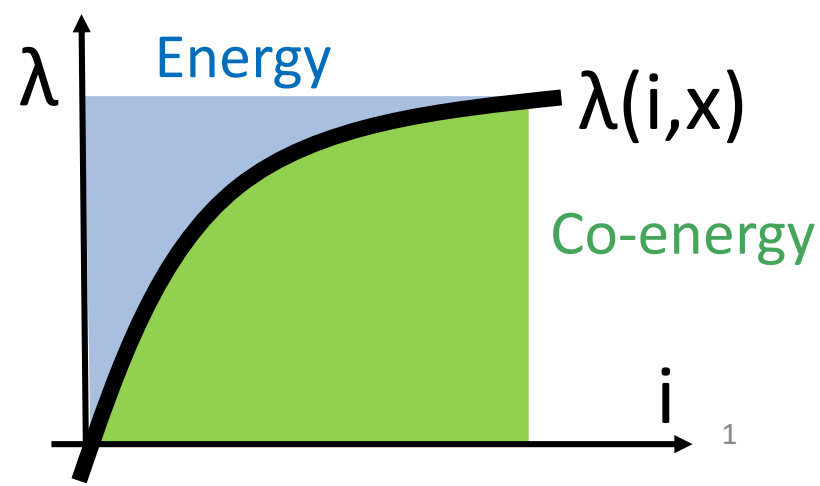

Electrically linear systems

Identifying linearity speeds up calculations and reduces error

Inductance

$$\lambda(i,x) = L(x)i, \qquad L(x) = \frac{N^2}{\mathcal{R}(x)}$$

Voltage of mechanical origin

$$v = L(x)\frac{\mathrm{d}i}{\mathrm{d}t} + [L'(x)i]\frac{\mathrm{d}x}{\mathrm{d}t}$$

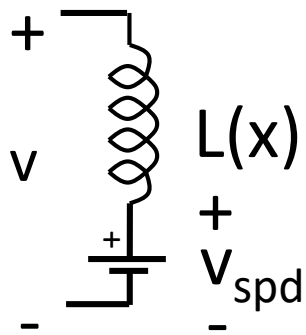

Energy & Co-energy

$$\text{Co-energy} = \frac{1}{2}L(x)i^2$$

function of current

$$\text{Energy} = \frac{1}{2}L(x)^{-1}\lambda^2$$

function of flux

$$\text{Co-energy}(i,x) = \lambda i - \text{Energy}(\lambda,x)$$

Force of electric origin

(direction of increasing x)

$$f^e = +\frac{\partial}{\partial x}[\text{Co-energy}] = -\frac{\partial}{\partial x}[\text{Energy}]$$

$$\lambda = +\frac{\partial}{\partial i}[\text{Co-energy}]$$

$$i = \frac{\partial}{\partial \lambda}[\text{Energy}]$$

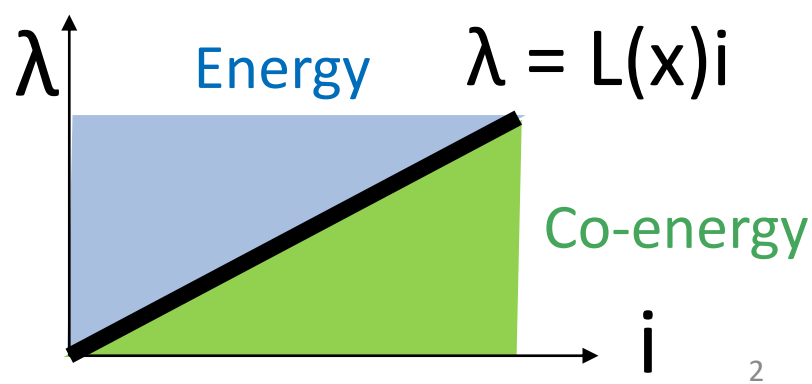

Multiple ports – "Charge one coil at a time"

$$\begin{aligned}\text{Energy}(\lambda_1, \lambda_2, \lambda_3 \ldots, x) = &\int_0^{\lambda_1} i_1(\lambda_1', 0, 0, \ldots, x)\,\mathrm{d}\lambda_1' \\ &+ \int_0^{\lambda_2} i_2(\lambda_1, \lambda_2', 0, \ldots, x)\,\mathrm{d}\lambda_2' \\ &+ \int_0^{\lambda_3} i_3(\lambda_1, \lambda_2, \lambda_3', \ldots, x)\,\mathrm{d}\lambda_3' + \cdots \text{ [J]}\end{aligned}$$

$$\begin{aligned}\text{Co-energy}(i_1, i_2, i_3, \ldots, x) = &\int_0^{i_1} \lambda_1(i_1', 0, 0, \ldots, x)\,\mathrm{d}i_1' \\ &+ \int_0^{i_2} \lambda_2(i_1, i_2', 0, \ldots, x)\,\mathrm{d}i_2' \\ &+ \int_0^{i_3} \lambda_3(i_1, i_2, i_3', \ldots, x)\,\mathrm{d}i_3' + \cdots \text{ [J]}\end{aligned}$$

$$\text{Energy}(\lambda_1, \lambda_2, \lambda_3, \ldots, x) + \text{Co-energy}(i_1, i_2, i_3, \ldots, x)$$
$$= \lambda_1 i_1 + \lambda_2 i_2 + \lambda_3 i_3 + \cdots$$

Problem 1 (25 points)

A single-phase generator consists of a coil on the stator and a coil on the rotor with a mutual inductance variation as 0.1cos(θ) (Henries) where θ is the angle from the stator field axis to the rotor field axis . The rotor is being driven at a constant speed of 377 radians per second and the rotor coil has a constant dc current i_r = 5 A. The self inductances of the stator and rotor are both constants and you may assume a linear magnetic core.

a) Compute the open-circuit stator voltage (i_s = 0) as a function of time (recall that dθ/dt=ω and assume some angle θ= θo at time zero)

$$\lambda_s = L_s i_s + 0.1\cos(\theta) i_r$$

$$\lambda_r = 0.1\cos(\theta) i_s + L_r i_r$$

$$\theta = 377t + \theta_0$$

$$V_s = \frac{d\lambda_s}{dt}$$

$$V_s = L_s \cancel{\frac{di_s}{dt}}^{\,0} + 0.1\cos(\theta)\cancel{\frac{di_r}{dt}}^{\,0} - 0.1\sin(\theta)\frac{d\theta}{dt} i_r$$

b) What is the torque of electrical origin when i_s = 10 Amps and θ = 45°?

$$T^e = \frac{\partial W_m'}{\partial \theta}$$

$$W_m' = \int_0^{i_s} \lambda_s(\hat{i}_s, i_r = 0, \theta)\, d\hat{i}_s + \int_0^{i_r} \lambda_r(i_s, \hat{i}_r, \theta)\, d\hat{i}_r$$

Problem 2 (25 Points)

The flux linkages for a 2-coil system are given as

$$\lambda_1 = \left(\frac{0.0085}{1+\frac{x}{l}}\right) i_1 - \left(\frac{0.0021}{1+\frac{x}{l}}\right) i_2$$

$$\lambda_2 = -\left(\frac{0.0021}{1+\frac{x}{l}}\right) i_1 + \left(\frac{0.0021}{1+\frac{x}{l}}\right) i_2$$

For this system, find:

a) The co-energy. (9 points)
b) The force of electric origin. (9 points)
c) What is the force of electric origin when i_1=1 A, i_2=0.5 A, x=1 cm, and l=20 cm? (7 points)

$$W_m' = \int_0^{i_1} \lambda_1(\hat{i}_1, i_2=0, x)\, d\hat{i}_1 + \int_0^{i_2} \lambda_2(i_1, \hat{i}_2, x)\, d\hat{i}_2$$

$$f^e = \frac{\partial W_m'}{\partial x}$$

Problem 1B (18 points)

For the structure drawn below, the movable member is constrained to move left and right only as indicated in the figure where "x" is the distance to the edge of the movable member. The large members are fixed, and the depth into the page for all members is 2cm. The gap g is 1mm, and the number of turns N =100. You may neglect fringing in all the gaps, and you may assume the iron is infinitely permeable.

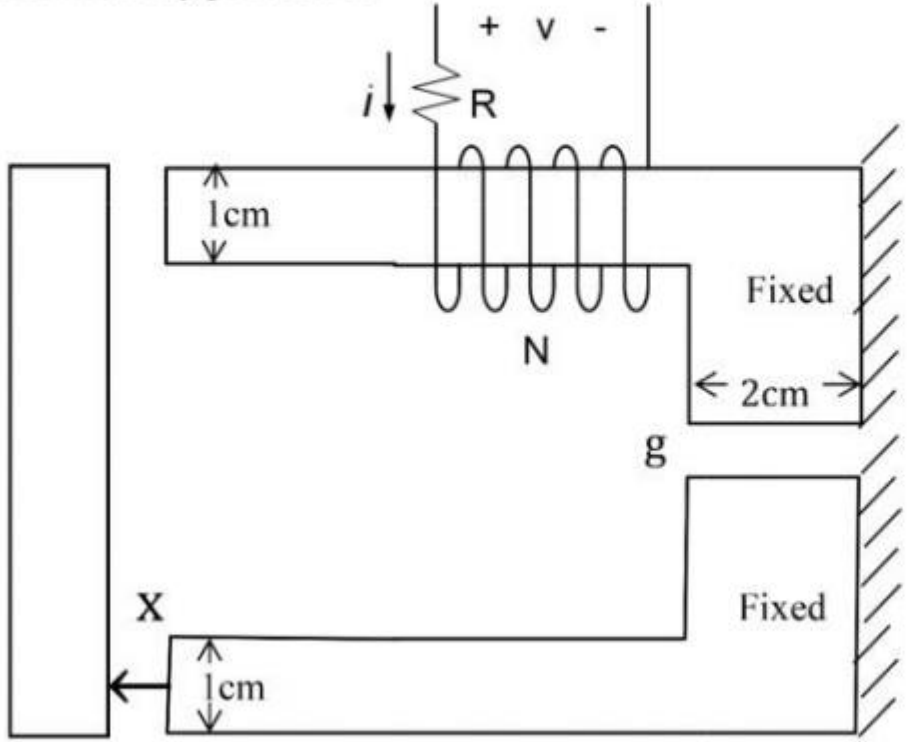

$$R_{tot} = \frac{g}{2\mu_0 A_x} + \frac{2x}{\mu_0 A_x}$$

$$= \frac{1}{2\mu_0 A_x}(g+4x)$$

$$\phi = \frac{Ni}{R_{tot}}$$

$$\lambda = N\phi$$

$$\lambda = \frac{N^2 i}{R_{tot}}$$

$$V = iR + \frac{d\lambda}{dt}$$

a) Find the total reluctance of the main flux path in terms of x
b) Find the flux linkage, λ (defined for the voltage polarity shown)
c) Find an expression for the voltage, v in terms of x, i, and time t

Exam 2, Fall 2018

Problem 2 (25 Points)

A stator-rotor system has flux linkage given as

$$\lambda_s = L_s\left(1+\cos(2\theta)\right)i_s + M\left(9\cos(\theta)+\cos(3\theta)\right)i_r$$
$$\lambda_r = M\left(9\cos(\theta)+\cos(3\theta)\right)i_s + L_r\left(1+\cos(2\theta)\right)i_r$$

a) Find the co-energy W_m'.

b) Find the torque of electric origin T^e.

c) What is the torque when $L_s = L_r = 1\text{H}$, $M = 1.3\text{H}$, $i_s = 1\text{A}$, $i_r = 0.1\text{A}$, and $\theta = -45°$?

a) $W_m' = \int_0^{i_s} \lambda_s(\hat{i}_s, i_r=0, \theta)\, d\hat{i}_s + \int_0^{i_r} \lambda_r(i_s, \hat{i}_r, \theta)\, d\hat{i}_r$

$W_m' = \frac{1}{2}L_s(1+\cos(2\theta))\, i_s^2 + M(9\cos(\theta)+\cos(3\theta))\, i_s i_r + \frac{1}{2}L_r(1+\cos(2\theta))\, i_r^2$

b) $T^e = \frac{\partial W_m'}{\partial \theta}$ $\boxed{T^e = -\left[L_s i_s^2 + L_r i_r^2\right]\sin(2\theta) - M(9\sin(\theta)+3\sin(3\theta))\, i_s i_r}$

c) $T^e = -\left[1(1)^2 + 1(0.1)^2\right]\sin(2(-45°)) - 1.3(9\sin(-45°)+3\sin(3(-45°)))(1)(0.1)$

$T^e = 1.01 + 1.103$

$\boxed{T^e = 2.113\ \text{Nm}}$

Exam 2, Fall 2018

Problem 1 [25 points]

The flux linkages in an energy-conservative electromechanical system are given by

$$\lambda_a = L_a i_a + (M\cos\theta) i_b,$$
$$\lambda_b = L_b i_b + (M\cos\theta) i_a + (M\sin\theta) i_c,$$
$$\lambda_c = L_c i_c + (M\sin\theta) i_b,$$

where L_a, L_b, L_c and M are positive constants, and i_a, i_b, i_c are currents into the system.

(a) Is the system electrically linear? [1 point]

(b) How many electrical and mechanical ports does the system have? [2 + 2 points]

(c) Find the co-energy $W'_m(i_a, i_b, i_c, \theta)$ for this system. [12 points]

(d) Compute the torque of electric origin $T_e(i_a, i_b, i_c, \theta)$. [3 points]

$$\boxed{W_m'(i_a, i_b, i_c, \theta) = \frac{1}{2} L_a i_a^2 + \frac{1}{2} L_b i_b^2 + M\cos(\theta)\, i_a i_b + \frac{1}{2} L_c i_c^2 + M\sin(\theta)\, i_b i_c}$$

D. $$T_e(i_a, i_b, i_c, \theta) = \frac{\partial W'(i_a, i_b, i_c, \theta)}{\partial \theta}$$

$$= -M\sin(\theta)\, i_a i_b + M\cos(\theta)\, i_b i_c$$

Problem 3 [25 points]

A translational electromechanical dynamical system is shown in Figure 2.

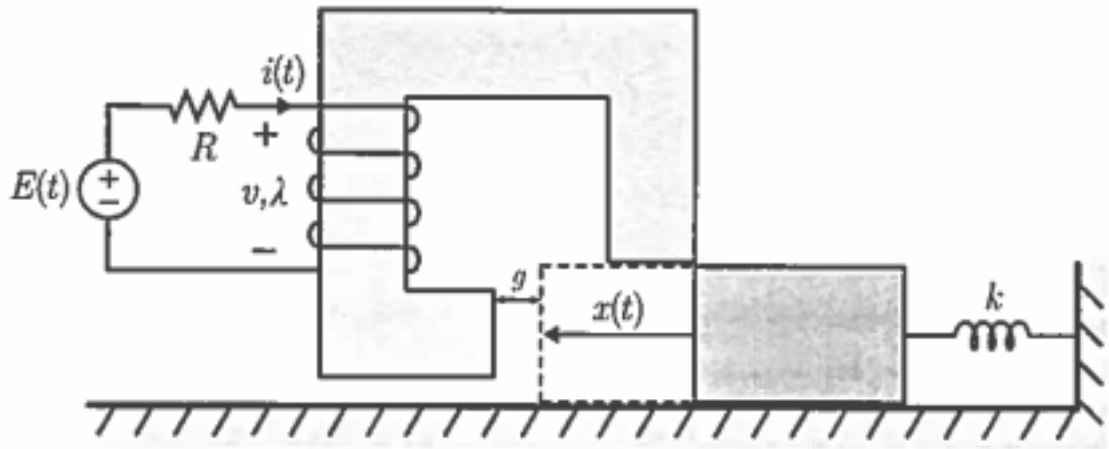

Figure 2: Electromechanical system.

In this system, a voltage source E in series with a resistor R induces a current i and flux linkage λ in the coil surrounding a looped magnetic structure with a lossless core. A metallic block with mass m attached to a spring with constant k is oriented in such a way as to create a variable gap g in the magnetic structure. The block slides along a frictionless surface and is only able to move in the lateral direction denoted by the position x. When $x = 0$, the spring is uncompressed.

The inductance of the magnetic structure is given by $L(x) = L_o x$. Additionally, note that $i(t), x(t)$, and $E(t)$ are all functions of time t.

(a) Derive the force of electric origin $f^e(i, x)$ acting on the block. (Hint: Derive $W'_m(i, x)$) [4 points]

(b) Derive the mechanical equation of the system as a function of the inputs i, x, and E and the parameters R, L_o, and k. Complete the equation below. [4 points]

(c) Derive the electrical equation of the system as a function of the inputs i, x, and E and the parameters R, L_o, and k. Complete the equation below. [7 points]

Exam 2, Spring 2018