Using an H-Bridge

What happens if you want to go backwards sometimes – not just forward? In your motor drive circuit you have each DC motor connected to a transistor so that the motors can be turned on and off by a voltage supplied to the nMOS gate pin. The transistor isolates a higher-power motor from the lower-power electronics that control it.

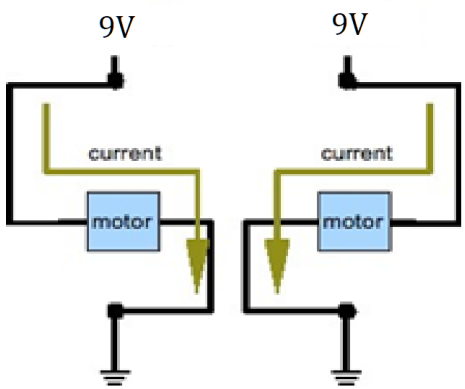

Figure 1: A single-direction car configuration showing 2 motors each connected to a 7.2V battery.

A single transistor can only connect the DC motor so the current flows in only one direction. To have a single motor run in both directions, an H-bridge is commonly used. The reason for the name "H-bridge" will become clear in a moment.

Figure 2 was drawn to illustrate how an H-bridge works. The H-bridge uses digital signals (high/low) to control the ON/OFF state of the motor and the FORWARD/BACKWARD state as shown in Figure 2. The unusual shape of the connection will help you see how the H-bridge works. Four switches have been inserted between the terminals of the 9V battery and ground with one of the motors connected in the center. There are 16 possible ways to open and close the four switches, only two of which are of interest. One of the interesting configurations is shown in figure 2 where switch 1 and switch 4 are closed. In this configuration the current is

Notes:

flowing through the motor in one direction. If switch 1 and 4 are open but switch 2 and switch 3 are closed instead you can see that the current will flow through the opposite direction. Of the other 14 states we will only say that some of them are completely useless and some are downright destructive. This is what an H-bridge does – it is a device where the switches are transistors and internal logic makes certain that only the two desirable states are ever accessed.

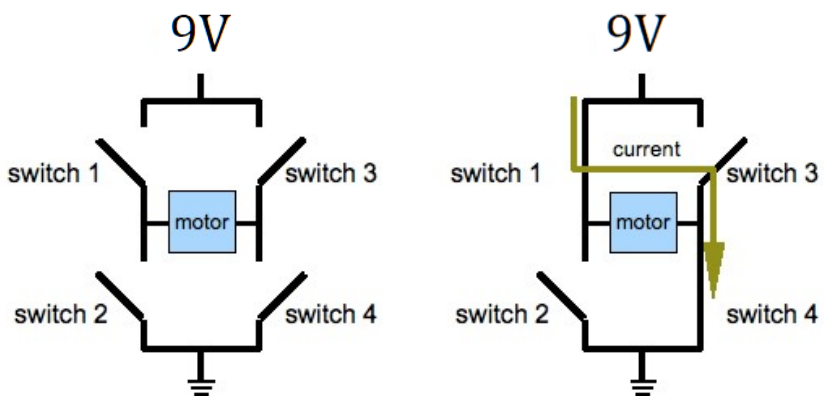

Figure 2: Thinking about how a single motor might be connected to a 9V battery in two ways to control the direction of current flow through it.

Answer Question 1

Wiring the H-Bridge

In your kits you should have an H-bridge chip SN754410 – each H-bridge chip can drive two motors so you only need 1 chip. The H-bridge is designed to replace the transistors and biasing resistors that you have been using as the motor drive circuitry. This may not only add additional functionality by allowing the motors to spin in either direction but also require less real estate on your breadboard.

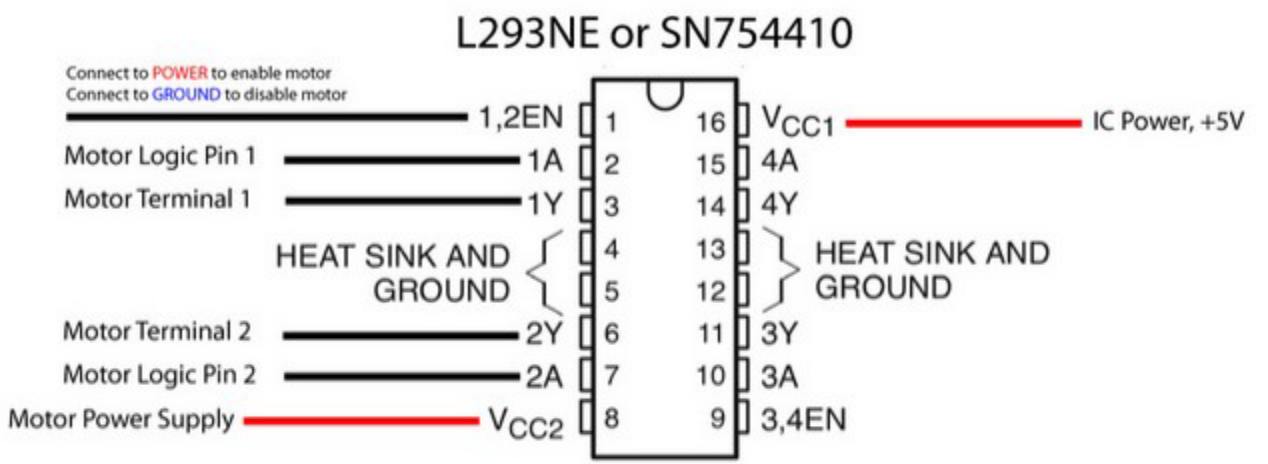

EN	1A	2A	FUNCTION
H	L	H	Turn right
H	H	L	Turn left
H	L	L	Fast motor stop
H	H	H	Fast motor stop
L	X	X	Fast motor stop

L = low, H = high, X = don't care

Figure 3: The pinouts for the H-bridge chip.

POWER - The first thing to notice is that there are two pins that provide power, one labeled V_{cc1} (pin 16) and the other V_{cc2} (pin 8). All the control circuitry on the chip that is responsible for switching the direction of current flow allowing the motor to run in both directions is fabricated using a technology that needs V_{cc1} =5V to work correctly (use 5 volts from your Zener circuit or your ADALM2000 (M2k) voltage supply here!). The second is the voltage used to drive the motors – so far you have been using 9V batteries to power the motors provided directly. In the middle of the chip there are 4 pins (pins 4, 5, 12, 13) dedicated to ground. All four must be connected together and to the negative terminals of BOTH batteries/power sources.

ENABLE - As you can see there are two H-bridges on a single IC…so one chip can control 2 motors. Each side has ENABLE pins (pins 1,9). These pins are used for more sophisticated designs where multiple devices are sharing

Notes:

Notes:

common control signals. Our use case will not need this flexibility, so these pins are always set HIGH. Or are they? These ENABLE inputs can be used to control the speed of the motor by enabling and disabling the circuitry. Because of this, the H-bridge will provide the ability to go backwards while also retaining speed control of the motors using Pulse Width Modulation through the ENABLE pins.

Motor Terminal Connection – the pins 1Y and 2Y (pins 3 and 6) are the two pins that are connected to the terminals of the motor. Pins 3Y and 4Y (pins 11 and 14) are the connections for the motor terminals of the second H-bridge. Be sure to connect the two motors with the same polarity. That is, if pin 1Y is connected to the positive terminal of one of the motors connect pin 3Y to the positive terminal of the other.

Control Signals – pins 1A and 2A (pins 2 and 7) are the pins used to control the direction of spin of one motor. The pins 4A and 3A are the same signals for the second H-bridge. It is these signals that we are most interested in. The table above specifies the behavior of the for different digital voltage levels – H implies that the voltage at the pin is HIGH or 9V, L implies that the voltage at the pin is LOW or 0V, and an X means that is doesn't matter. The designations *turn left* and *turn right* are arbitrary descriptions of the two direction the motor spins.

Light-Controlled Forward/Backward Motors

Now that you understand how the H-Bridge functions, we will build a light controlled motor drive circuit that will move forward in light conditions and move backwards in dark ones. Because the H-bridge IC requires a 5V input, set-up your M2K to supply a 5V source using its power supply functionality. This can be done by clicking the power supply button on the user interface.

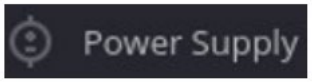

Connect the +V pin to one power rail of your breadboard and the GND Pin  to the ground. Because our battery and the M2k need to have a common ground, connect both grounds on your breadboard together. Now build the circuit shown in Figure 4. This circuit just represents our H-Bridge connection **without** the control logic.

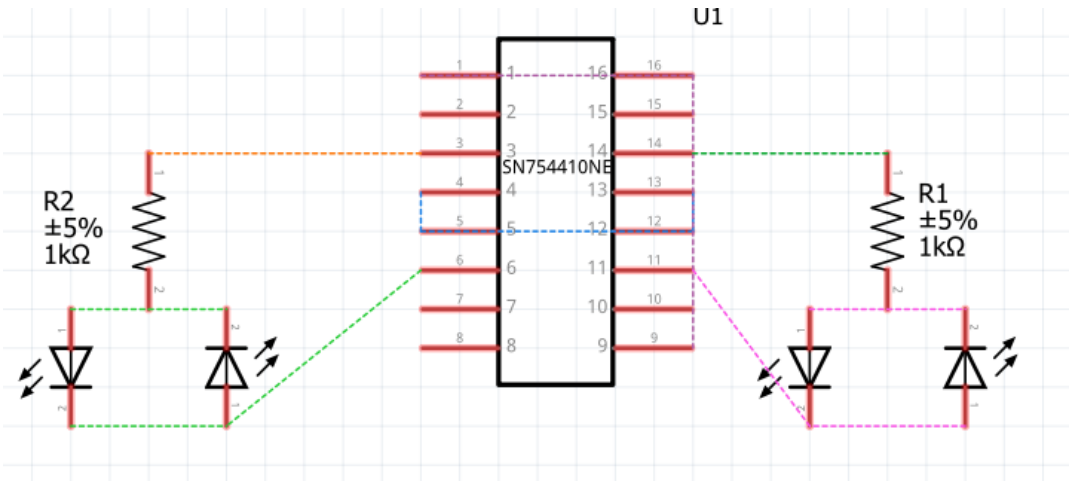

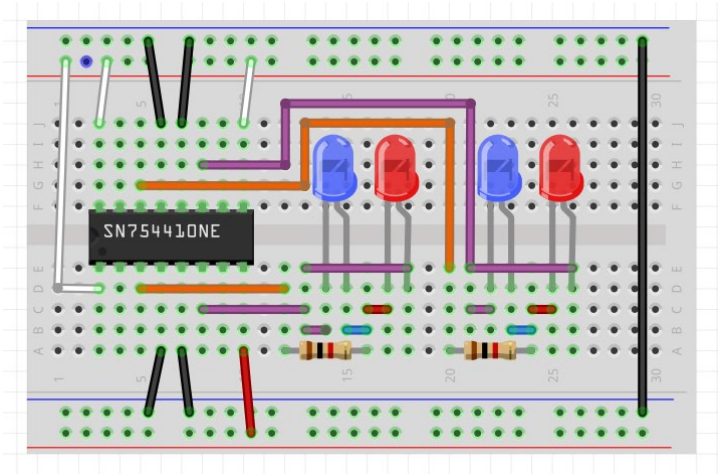

Figure 4: This shows how to connect the H-bridge to two LED to simulate our motors. Breadboard cleanliness is very important here. **REMEMBER** Pins 1, 9, and 16 must connect to 5V and must share a common ground with your battery.

Notes:

STOP! Before connecting power to the board, make sure the SN754410NE (H-Bridge) is receiving only 5 volts on Pins 16, 1, and 9 (V_{CC1}, EN1, EN2) and not the 9-volt source which will damage it. The 9-volt source should only be connected to the motor voltage (Pin 8, V_{CC2}).

Notes:

Now that we have our H-Bridge build, build the following circuit to generate our control signals.

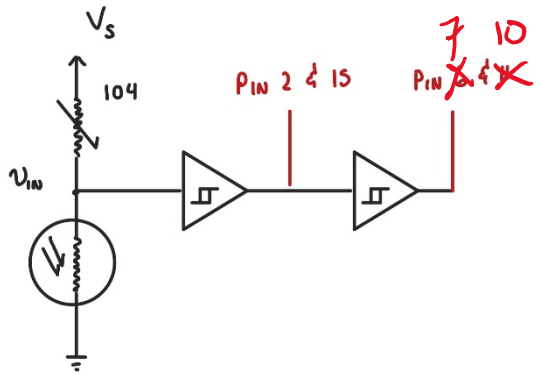

Figure 5: Light-control circuity with buffers

Connect the output of the first Schmitt Trigger inverter to pins 2 & 15, and the output of the second cascaded inverter to pins 7 & 10. Now plug in your battery to the opposite side that your M2K is connected too and ENABLE your 5v M2k output through Scopy. Tune the potentiometer so the LEDs alternate in your current lighting condition.

REMEMBER TO CONNECT THE ENABLE PINS (1 & 9) to your 5V rail

Replace the LEDs and resistor circuit with the red and black wires of your motor and submit a video of the motors running forwards and backwards in light and dark conditions.

Name:_____ UIN: | | | | | | | | | Section AB/BB: |

Using an H-Bridge

Question 1: The table below enumerates all 16 possible combinations – only 2 are useful. Fill in the *circuit behavior column*. One is done as an example.

Switch 1	***Switch 2***	***Switch 3***	***Switch 4***	***Circuit Behavior***
open	open	open	open	
open	open	open	closed	
open	open	closed	open	
open	open	closed	closed	
open	closed	open	open	
open	closed	open	closed	
open	closed	closed	open	
open	closed	closed	closed	Motor ponders its untimely demise
closed	open	open	open	
closed	open	open	closed	
closed	open	closed	open	
closed	open	closed	closed	
closed	closed	open	open	
closed	closed	open	closed	
closed	closed	closed	open	
closed	closed	closed	closed	

Question 2: Build a circuit that implements an H-Bridge light-controlled motors, and take a video that shows the motors are able to work properly in both the forward and reverse directions

Notes:

Question 3: in the space below draw a circuit diagram for the circuit you built in question 2. (please label all Integrated circuits and the pins that you are using on them)

Question 4: As suggested in the text above, how might you use the enable pins as an additional input to the H-bridge? Be specific.