Name/NetID:

Teammate/NetID:

Section AB/BB:

0 1 2 3 4 5 6 7

8 9 A B C D E F

(circle one)

Pre-lab 9: Pulse Width Modulation

VDR for Motor Control

Motor speed control could be accomplished by using a voltage divider circuit where the motor provides one of the two series resistances. The other series resistance might be assumed to be a variable resistor. The voltage to be divided would be that of your rechargeable battery pack used in lab.

Question 1: Based on your earlier laboratory measurements of the DC motor used to drive your wheel, what effective resistance R_m will the motor effectively have at a normal operating speed?

$$R_m = \_\_\_\_\_$$

The following circuit schematic describes this motor-drive scheme.

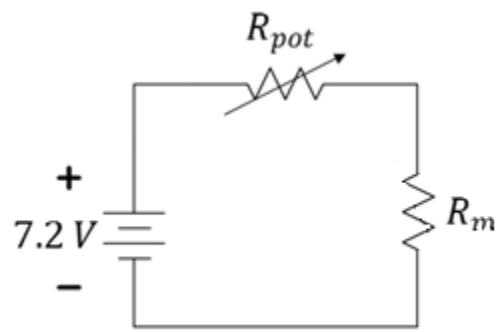

Figure 1: *The motor modeled as a resistor R_m in a voltage-divider circuit.*

Assume that the desired motor speeds occur if the voltage differential across the motor is between 2 and 5 volts.

Notes:

Question 2: Assume that the desired motor speeds occur if the voltage differential across the motor is between 2 and 5 volts. What range of resistance for R_{pot} should the variable resistor have in order to provide adequate speed control of the wheel?

Question 3: Compute the power consumed by the wheel and the power "wasted" by the variable resistor when the wheel is running at a moderate speed, say, a motor voltage of $5\ V$.

Question 4: Compute the efficiency of this design when the motor voltage is $5\ V$.

Question 5: Consider the range of resistances necessary and the power consumed by the variable resistor. Compare this to the specifications of the flex sensor provided in your kit. Why might this method of speed control prove to be difficult if a (flex) sensor was needed to provide the variable resistance of the voltage divider?

Notes:

PWM for Motor Control

Pulse width modulation is the use of a square wave (rather than a constant voltage) with an $A/2$ DC offset such that the voltage goes between 0 (ground reference) and A volts when switching. The "on" voltage, A, will be equal to the voltage of your rechargeable battery used in the lab and will be provided using the transistor in the normal "motor-drive circuit". When using PWM for motor speed control, we can adjust the duty cycle to provide a different rms voltage to the motor and, therefore, adjust the motor speed. This motor-drive scheme described is described by the schematic below.

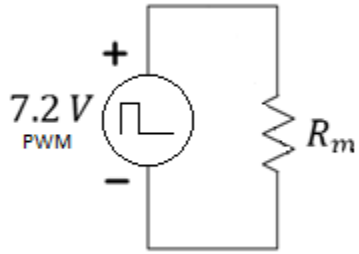

Figure 2: *Idealized model for using PWM-based motor-speed control.*

Question 6: Give an equation that represents ***rms*** voltage as a function of the peak-to-peak voltage, A, and duty cycle, d.

Question 7: Based on your earlier laboratory measurements of the DC motor used to drive your wheel, what PWM duty cycle will the motor effectively need for a normal operating speed? You may assume a battery pack voltage of 7.2 V.

Notes:

Question 8: Compute the power consumed by the wheel when the wheel is running at a moderate speed.

Question 9: How much power is theoretically “wasted” in this design?

Question 10: What is the efficiency under your assumptions?