Advanced Computer Networks cs538, Spring 2016 @ UIUC

Klara Nahrstedt

Lecture 3, January 28, 2016

Based on

Vinton G. Cerf and Robert E. Kahn, “A Protocol for Packet Network Intercommunication”, IEEE Trans. On Communication, 1974

David D. Clark, “The Design Philosophy of the DARPA Internet Protocols”, ACM SIGCOMM 1988

Prior 2010-2013, lecture material by Brighten Godfrey and Matt Caesar

Announcements

- Read over syllabus
- Read for Thursday:
  - End-to-end arguments in system design (Saltzer et al, 1984)
  - John Day et al, “Networking is IPC: A Guiding Principle for a Better Internet”, ACM CoNEXT 2008

Outline

- Original IP Architecture Design
- Retrospective View on DARPA Internet Protocols

Interconnection challenges

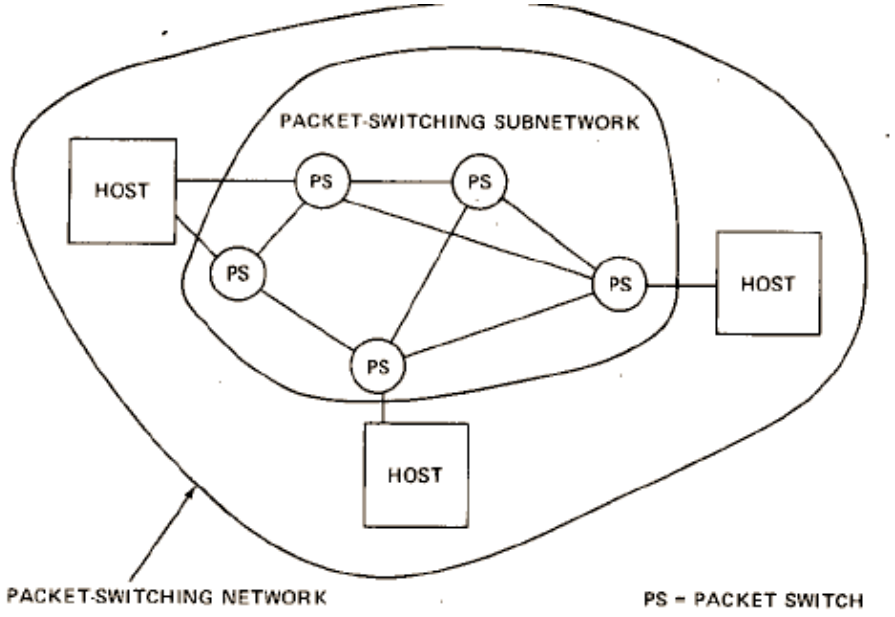

- Heterogeneity
  - Different addressing, supported packet lengths, reliability mechanism, latency, status information, routing
- Must let each network operate independently
- Solution:

Hosts

Protocols

IP

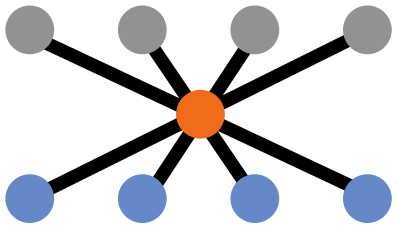

"unacceptable alternative"

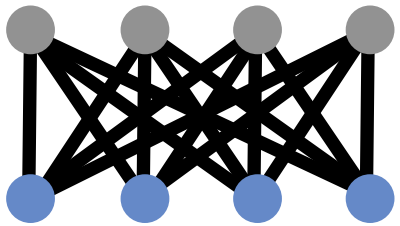

Gateways and IP

- Gateways sit at interface between networks
- ...and speak an Internetworking protocol

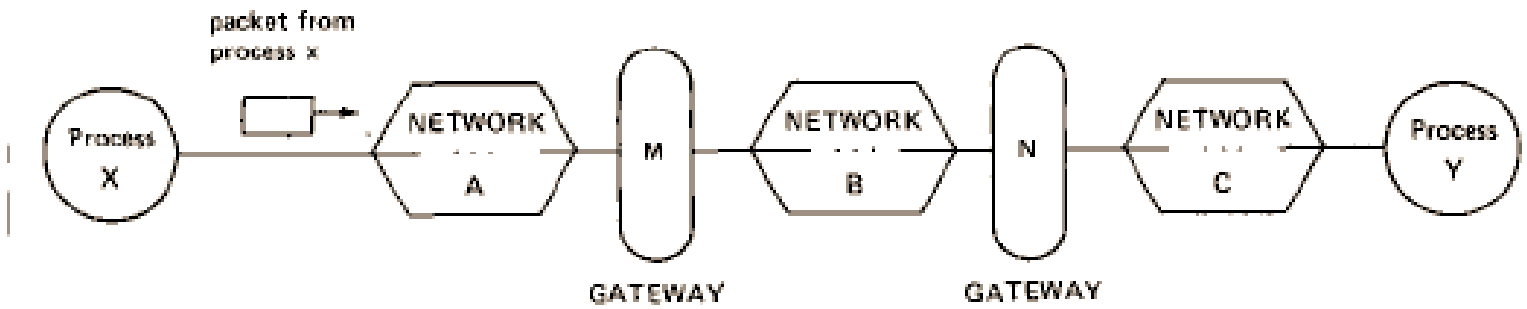

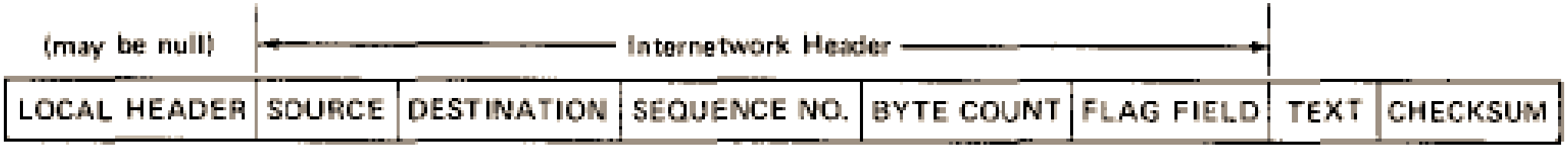

Internetwork Packet Format

IP Packet Fragmentation

- Allow maximum packet size to evolve
- Enable protocol mechanisms to split packets in-transit
  - byte-level sequence numbers
- Reassemble at end-hosts
  - Why not gateways?

Unreliable Datagrams

- No need for reliability in underlying network – why not?
- Greatly simplifies design
  - Exception handling always adds complexity
  - But in IP: Any problem? Just drop the packet
- What are benefits for datagrams?
  - Statistical multiplexing

Addressing & Routing

- Routing unspecified—but constrained!
  - Hierarchical (network, host) address
  - Route computed within network, hop-by-hop
  - 8 bits for network: *"This size seems sufficient for the foreseeable future."*
  - Later: 32 bits in three size classes (A,B,C), and then CIDR (Classless Inter-Domain Routing)
- Many new routing/forwarding designs need to change this address format

TCP Address

Segments and Packets from Messages

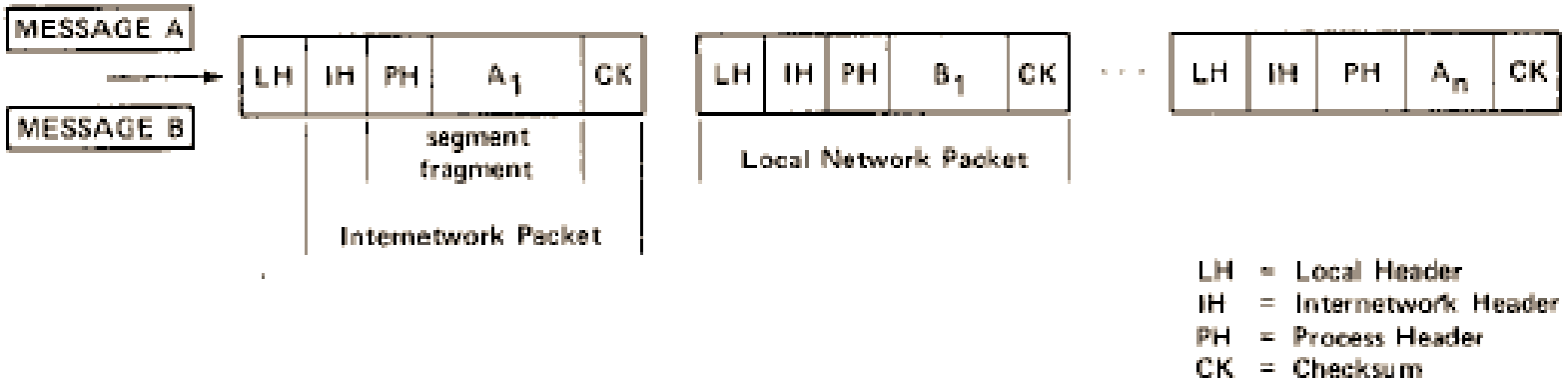

Ports

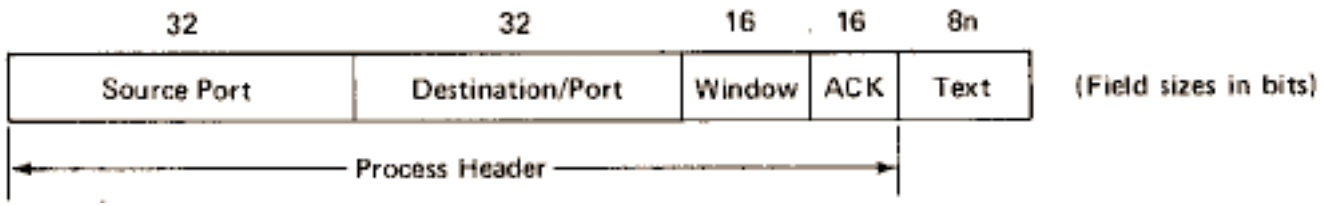

- Associated with a process on a host
- Identify endpoints of a connection ("association")
- Rejected design:
  - connection at host level
  - packet may include bytes for multiple processes
- What's the difference between a port and an address?

What we now call TCP

- Window-based scheme
- Provides reliability, ordering, flow control
  - Even though you might want only some of these
- What else does it do today?
  - Congestion control
  - Three-way handshake

Window Concept

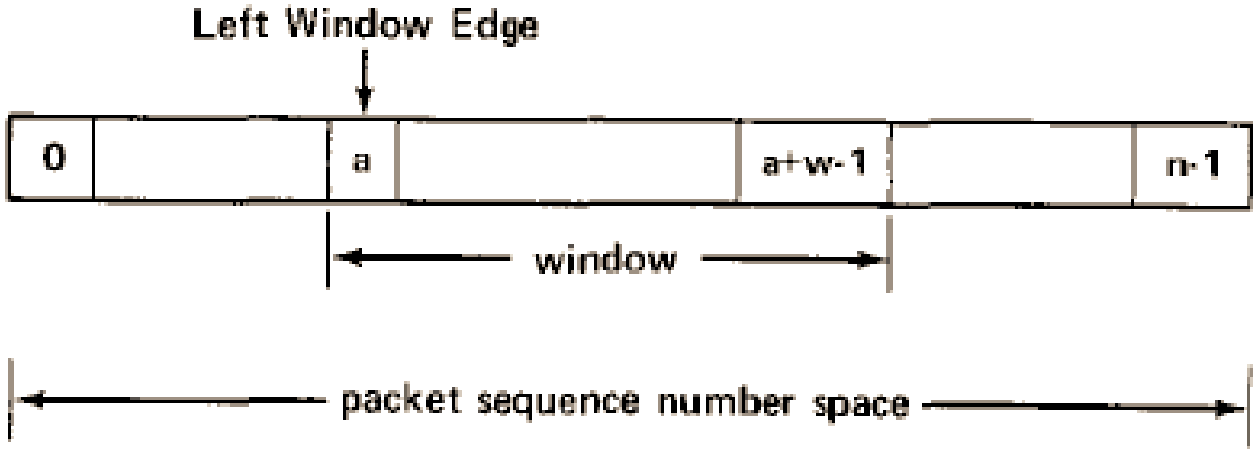

What we now call TCP

> *It is our expectation that the host level retransmission mechanism … will not be called upon very often in practice. Evidence already exists [ARPANET] that individual networks can be effectively constructed without this feature.*

- Why did they write this? Is it true now?
- No congestion control in this early version!
  - TCP congestion control introduces losses intentionally

Goals of the architecture

- Interconnect existing networks
- Survivability
- Multiple communication services
- Variety of networks
- Distributed management
- Cost effective
- Easy host attachment
- Resource usage accountability

Goals of the architecture

- 0. Interconnect existing networks
- 1. Survivability
- 2. Multiple communication services
- 3.Variety of networks
- 4. Distributed management
- 5. Cost effective
- 6. Easy host attachment
- 7. Resource usage accountability

0. Interconnect networks

- Assumption: One common architecture
- Technique: packet switching
  - Met target application needs
  - Already used in ARPANET, ARPA packet radio network
- Interconnect with layer of gateways (packet switches)

1. Survivability

- Definition: even with failures, endpoints can continue communicating without resetting high-level end-to-end conversation
  - Except when?
- Did this work?

1. Survivability

Key question for survivability:

Where is connection state stored?

In network

So, must replicate

- Complicated
- Does not protect against all failures

On end hosts

Shared fate

- Simpler
- If state lost, then it doesn't matter

Conclusion: stateless network, datagram packet switching

2. Multiple types of service

- Initially, just TCP
- But some apps do not want reliability
  - VoIP
  - XNET debugging protocol

2. Multiple types of service

- So, TCP/IP split
  - Datagram is basic building block for many services
- Still difficult to support low latency across all networks
  - Hard to remove reliability if lower layer provides it

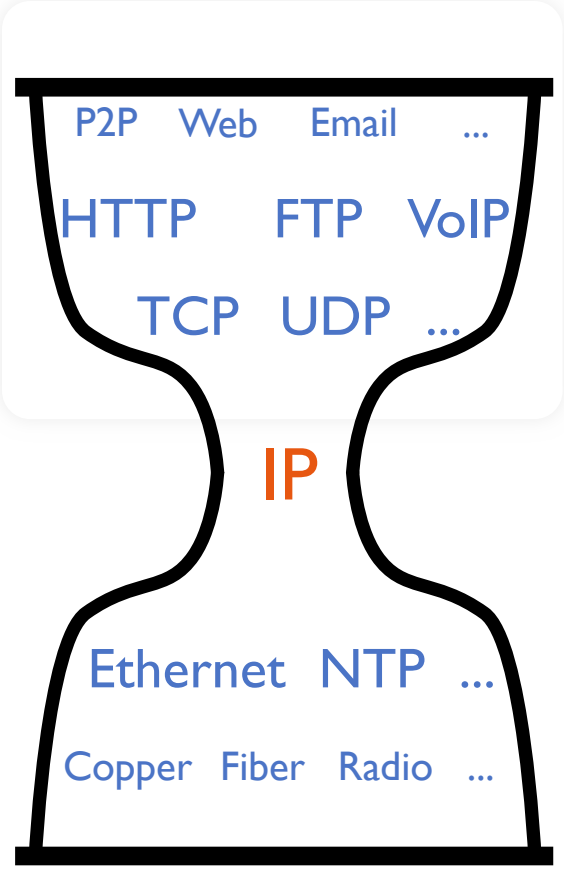

3. Variety of networks

- Datagram is simple building block
- Few requirements from underlying network technology
- "IP over everything"
  - D. Waitzman, "A Standard for the Transmission of IP Datagrams on Avian Carriers", RFC 1149

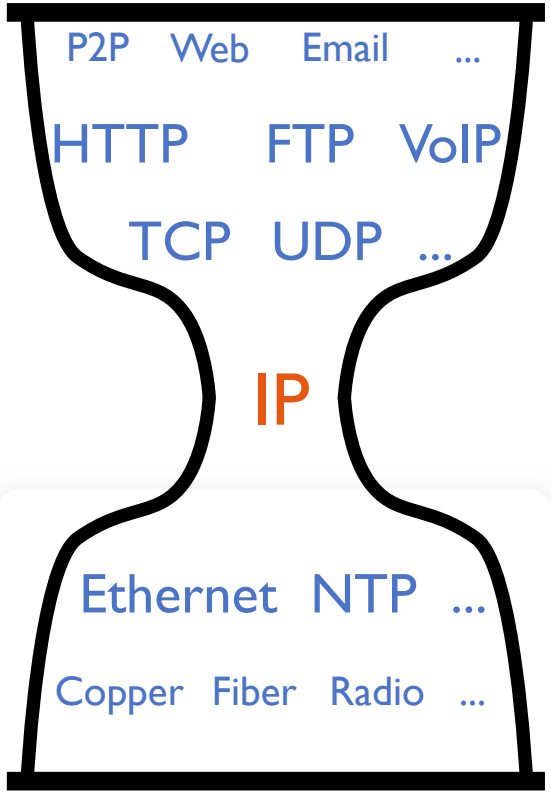

Photo: M. Betley / Wikimedia

4. Distributed management

> *... some of the most significant problems with the Internet today relate to lack of sufficient tools for distributed management, especially in the area of routing.*

— David Clark, 1988

Still a problem 20+ years later!

Later in this course:
software-defined networks
ease distributed management

5. Cost effective

- Inefficiencies:
  - 40 byte header
  - retransmission of lost packets
  - How much do these matter now?
- Many other sources of inefficiency
  - Congestion control
  - Load balancing
  - Extra round trips in protocols
  - …

6. Easy Host Attachment

- End-hosts must implement net services
- Problems?
  - end-host implementation complexity once caused concern to some people (end-hosts may be resource constrained)
  - host misbehavior

7. Accountability

- Difficult to account for who uses what resources
- Today: inter-ISP transit service often priced based on 95th percentile of utilization
  - Why is it only an approximation?
- Both an economic and security issue
  - Will return later in this course...

What Internet doesn't do

- *"The architecture tried very hard not to constrain the range of service which the Internet could be engineered to provide."*
- Extremely successful! But not as good at:
  - Reporting failure ("potential for slower and less specific error detection")
  - Resource management (next week!)
  - Multipath forwarding
  - Full illusion of reliability during failures
  - Security
    - Host misbehavior and accountability discussed briefly
    - Other aspects missing

Clark's new terms

fate-sharing instead of redundancy

Flow and byte stream

soft state

What kind of system is this?

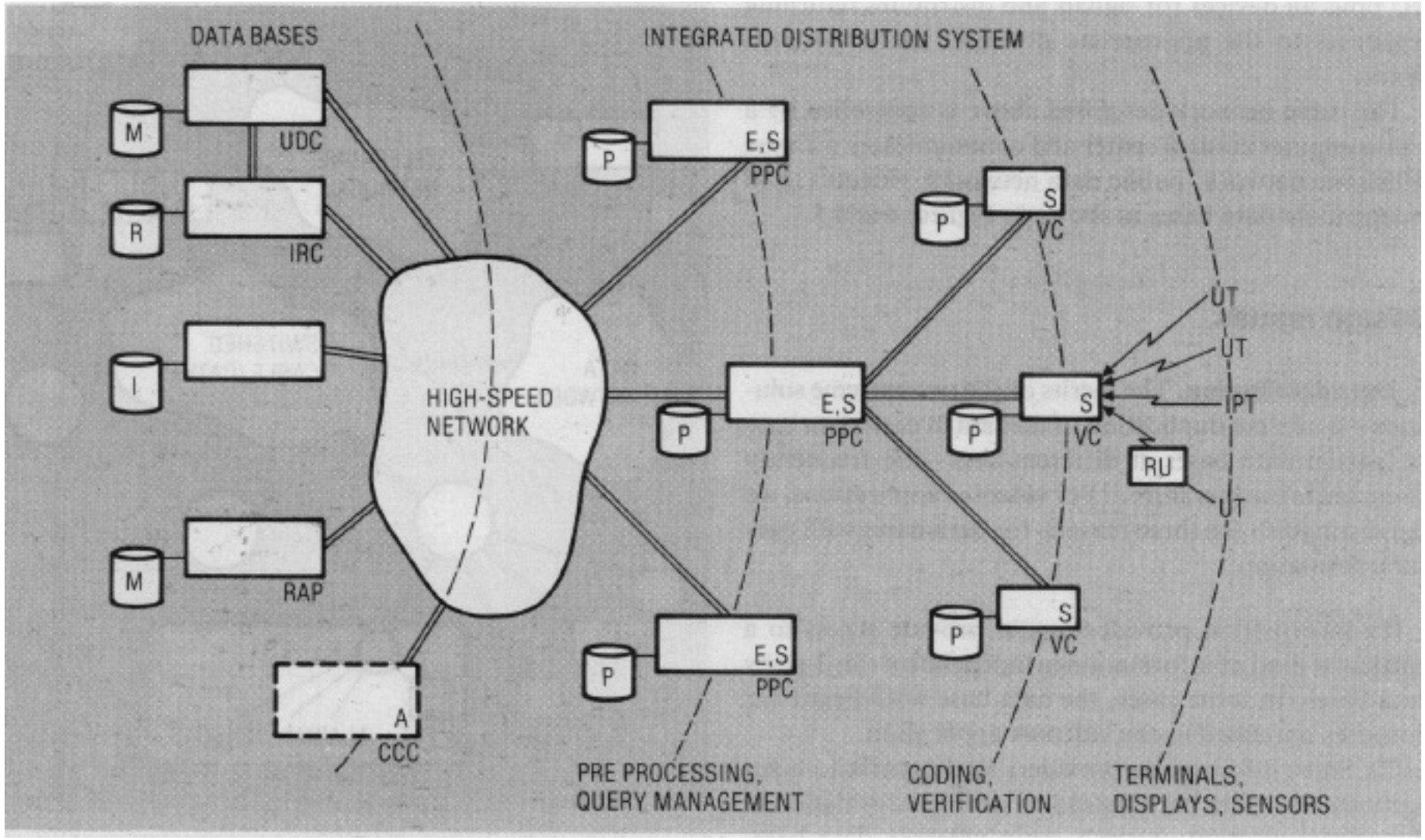

Discussion

- How would the network have been designed if the Internet were commercial?

A commercial ‘internet’

- Different priorities
  - accountability first
  - survivability & interconnection last
- Example: Videotex networks
  - e.g., France Telecom’s Minitel
  - Teletext and Viewdata

photo: wikimedia

Minitel – Videotex Online Service

- History
  - 1972: launched
  - 1995: 20 million users
  - 2012 June: Terminated
  - One of the world's most successful pre-World Wide Web online services
- Services
  - phonebook
  - banking
  - news
  - train or airline reservations
  - Message boards
  - stock transactions
  - + 25,000 more services in 1995

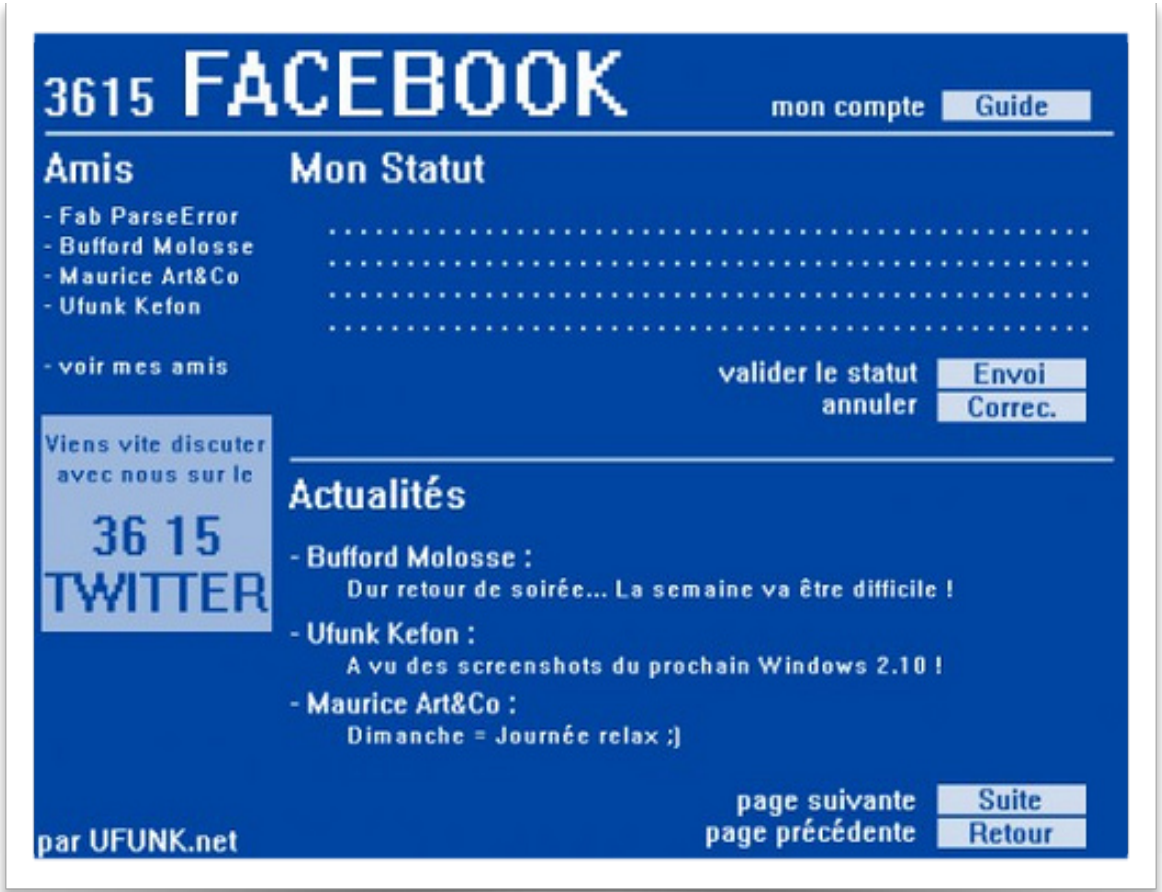

[Emilie Ogez]

Minitel

- Architecture
  - reliable
  - per-minute fee
  - centralized, closed
  - out-evolved by the Internet

photo: wikimedia

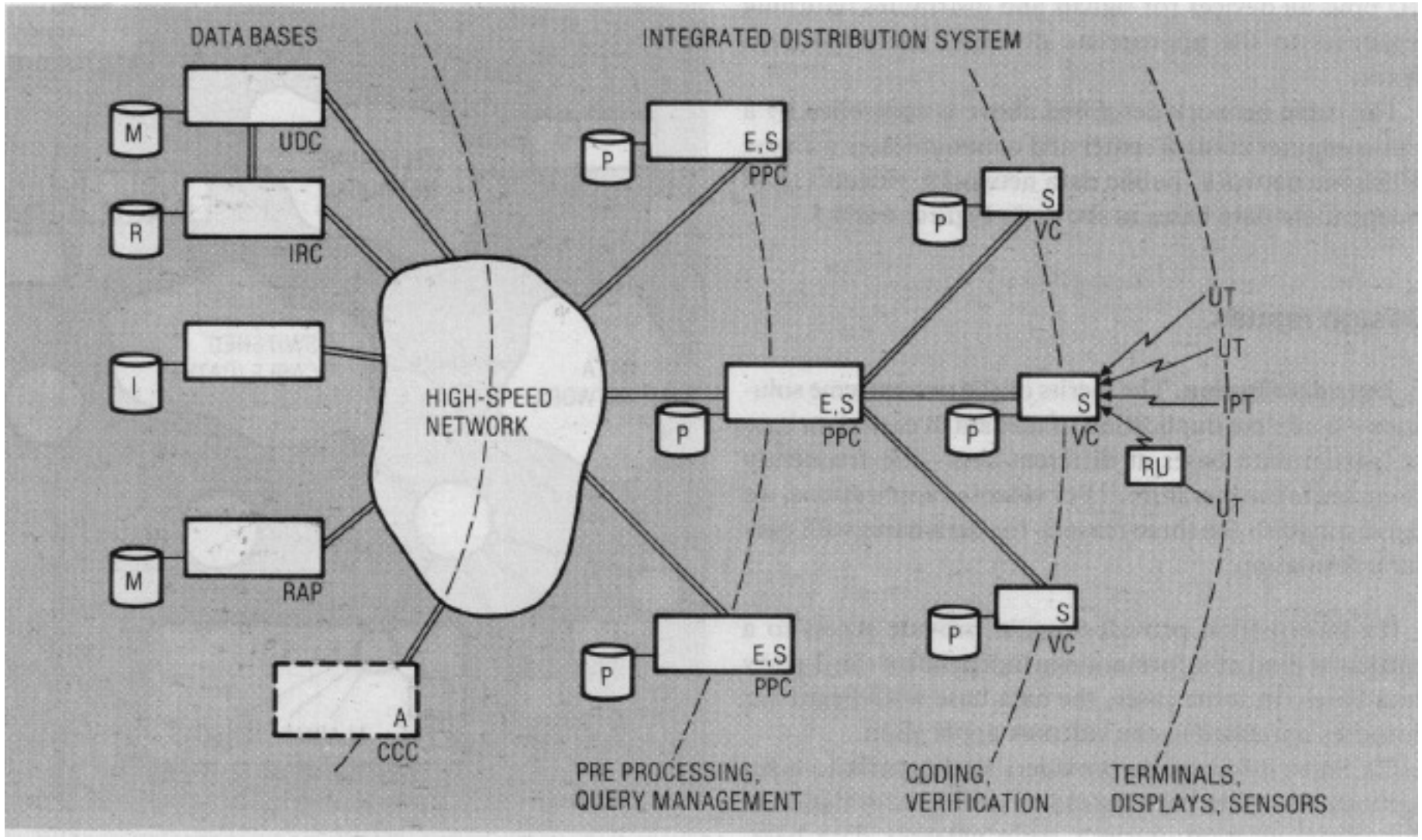

[A. J. S. Ball, G.V. Bochmann, and J. Gecsei. Videotex networks. IEEE Computer Magazine, 13(12):8–14, December 1980]

Background Information

TCP Three-Way Handshake

T
CP