Packet Switching

Switching and Forwarding

Bridges and LAN Switches

Cell Switching

Switching Hardware

© CS 438 Staff, University of Illinois

Where are We?

- Directly connected networks
  - Point-to-point connectivity
- Limitations
  - Number of hosts
  - Geographic area
- Next Goal
  - Communication between hosts that are not directly connected

© CS 438 Staff, University of Illinois

Next Topic: Switching

- Motivation
  - Why not just one direct link network?
- Basic approach
  - How can we extend the direct link abstraction?
- Challenges
  - What problems must we address?
- Examples
  - Where are these issues addressed in real networks?
- Details of the switch
  - What are the goals in design?
    How are these goals typically addressed?

© CS 438 Staff, University of Illinois

After Switching

- Heterogeneity
  - Switching allows multiple physical networks
  - But assumes one switching strategy
- Scale
  - Direct link networks: O(100) hosts
  - Packet-switched networks: O(100,000) hosts
- Beyond the basics
  - Quality of service
  - Congestion and performance analysis
  - Network trends and their importance

© CS 438 Staff, University of Illinois

How can many hosts communicate?

- Best: use one direct link network
- Naïve approach: full mesh
- Problem: doesn't scale

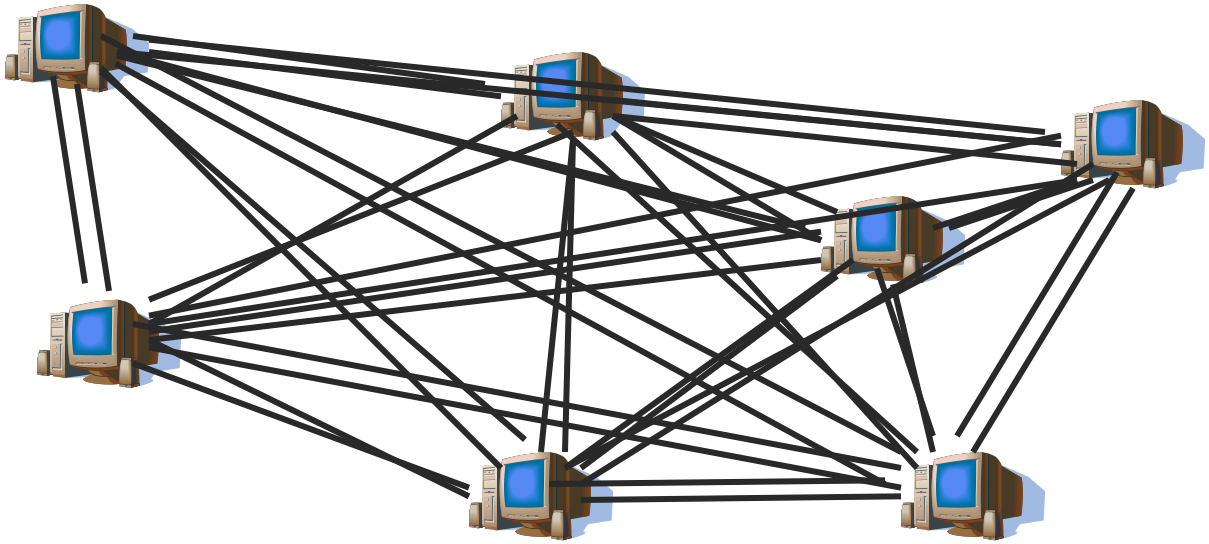

© CS 438 Staff, University of Illinois

How can many hosts communicate?

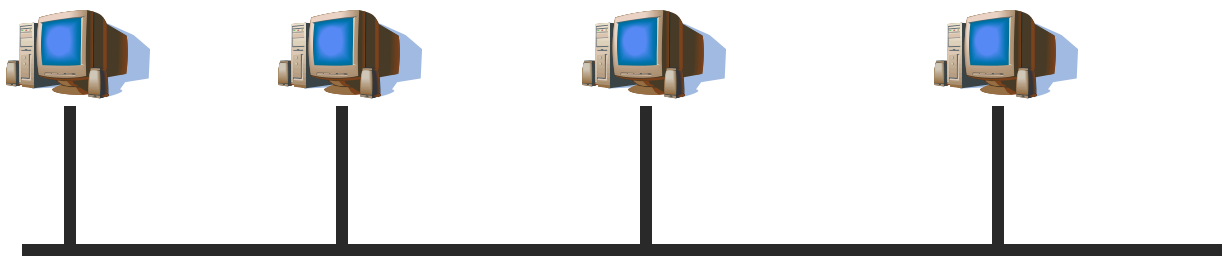

- Slightly better solution: shared media
- But, how to deal with larger networks (more hosts, larger geographic area)?
- How to deal with heterogeneous media? (different physical/MAC technologies?

© CS 438 Staff, University of Illinois

Real Solution: Switching

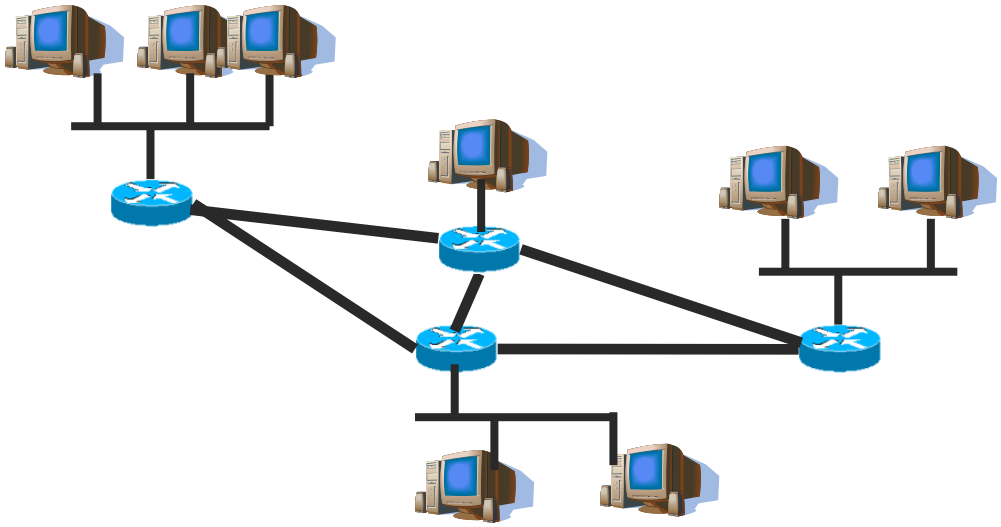

- Most basic function: allow communication between arbitrary endpoints
  - Provide illusion of one (reliable) physical network
  - On demand rather than connecting all pairs in advance
  - Share infrastructure across users (“statistical multiplexing”)

© CS 438 Staff, University of Illinois

Real Solution: Switching

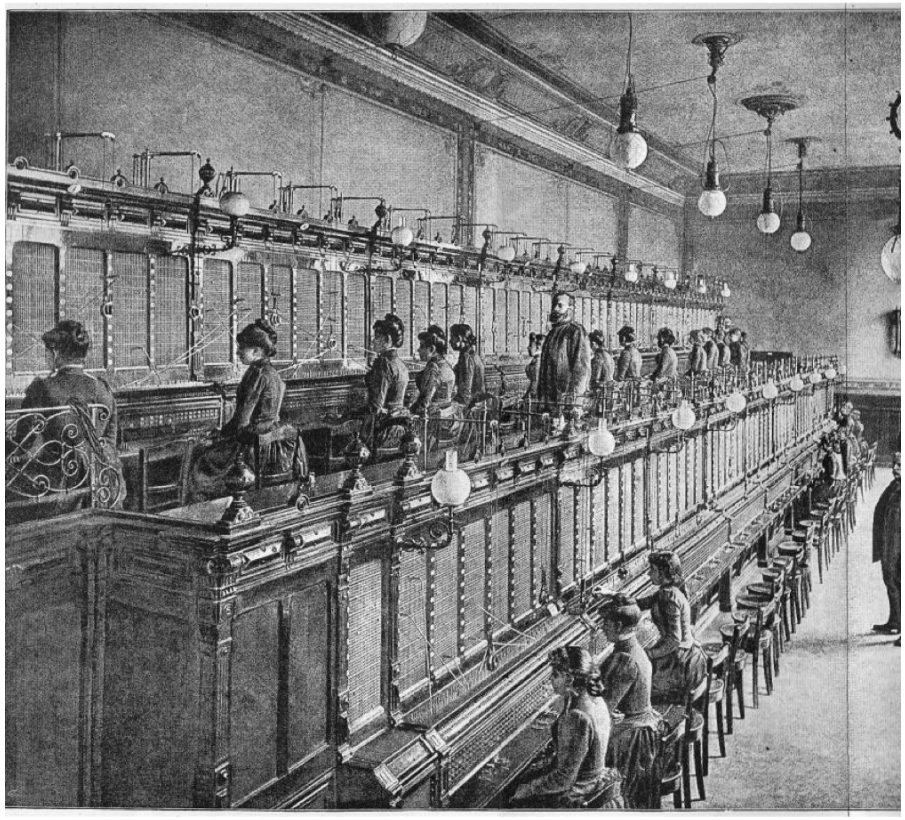

Telephone exchange in 1893

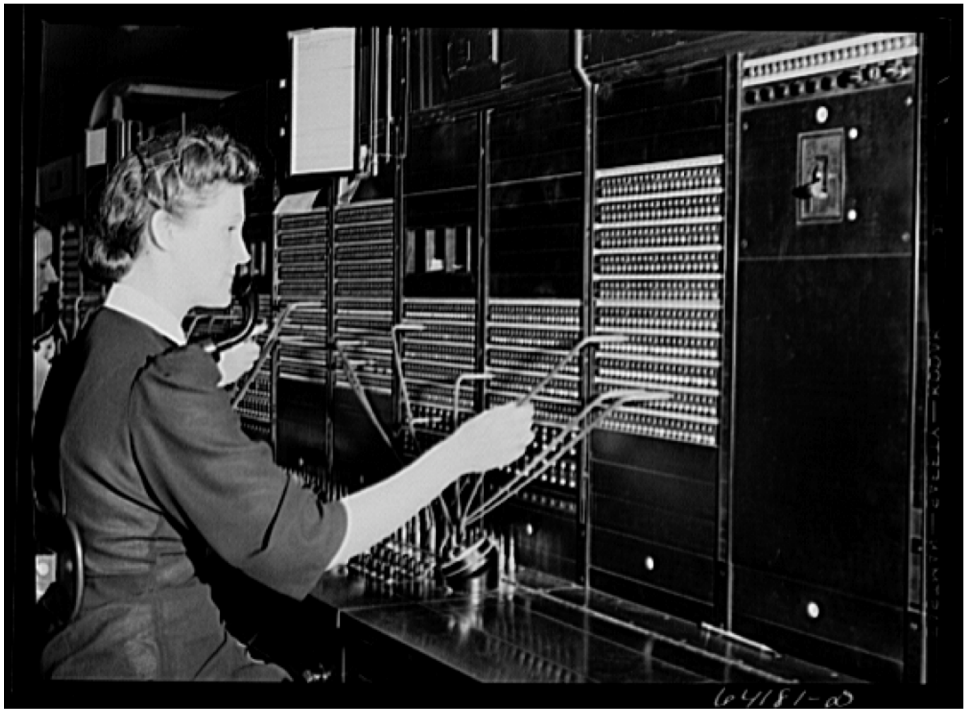

Telephone operator at Aberdeen proving grounds, ~1940

© CS 438 Staff, University of Illinois

Real Solution: Switching

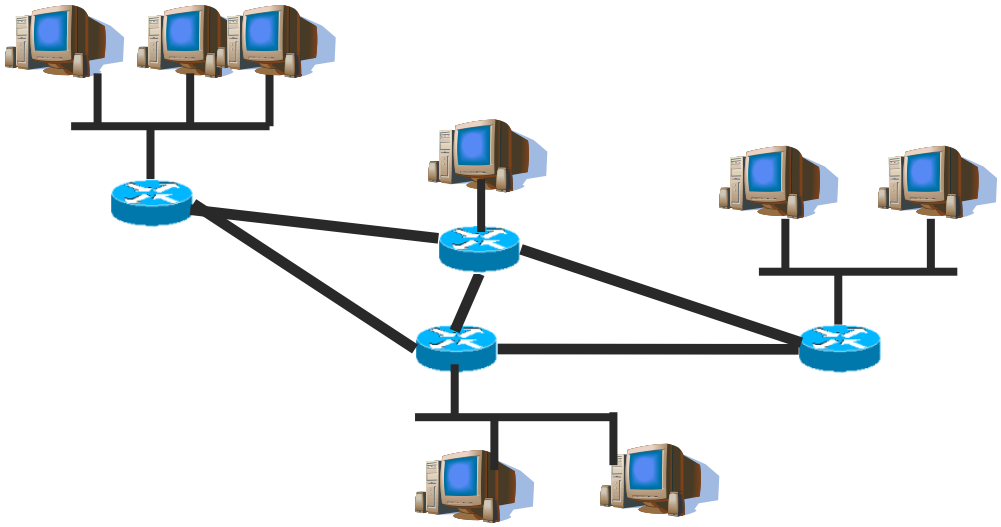

- Computer networks: more critical benefits
  - Translates between different link technologies, allowing **heterogeneity**
  - Isolates different physical networks to improve **scalability** and **modularity**

© CS 438 Staff, University of Illinois

Switches

- Build network from stars

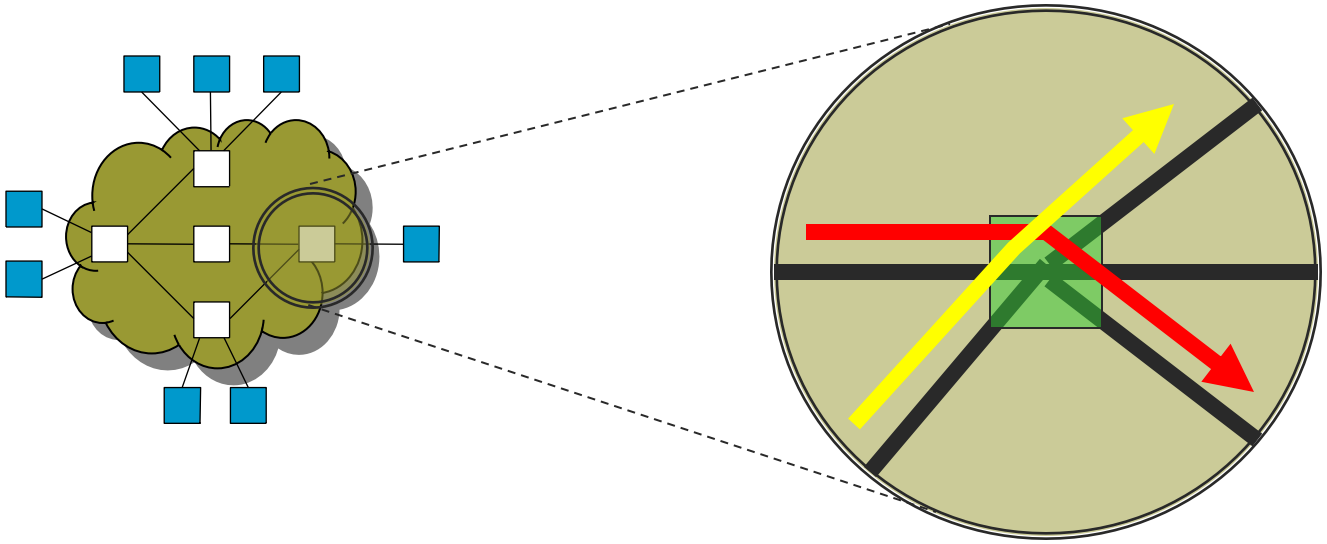

© CS 438 Staff, University of Illinois

Challenges

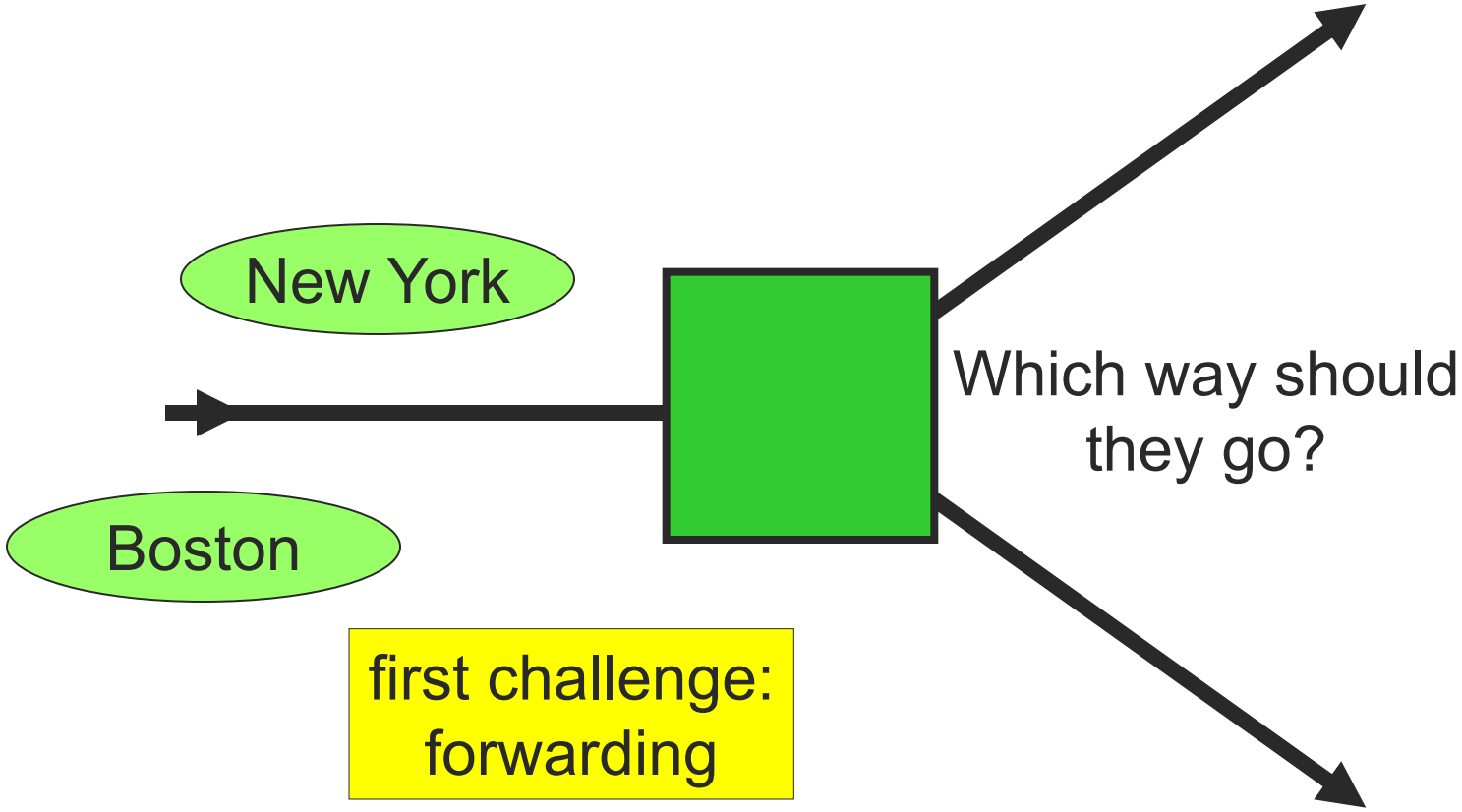

© CS 438 Staff, University of Illinois

Challenges

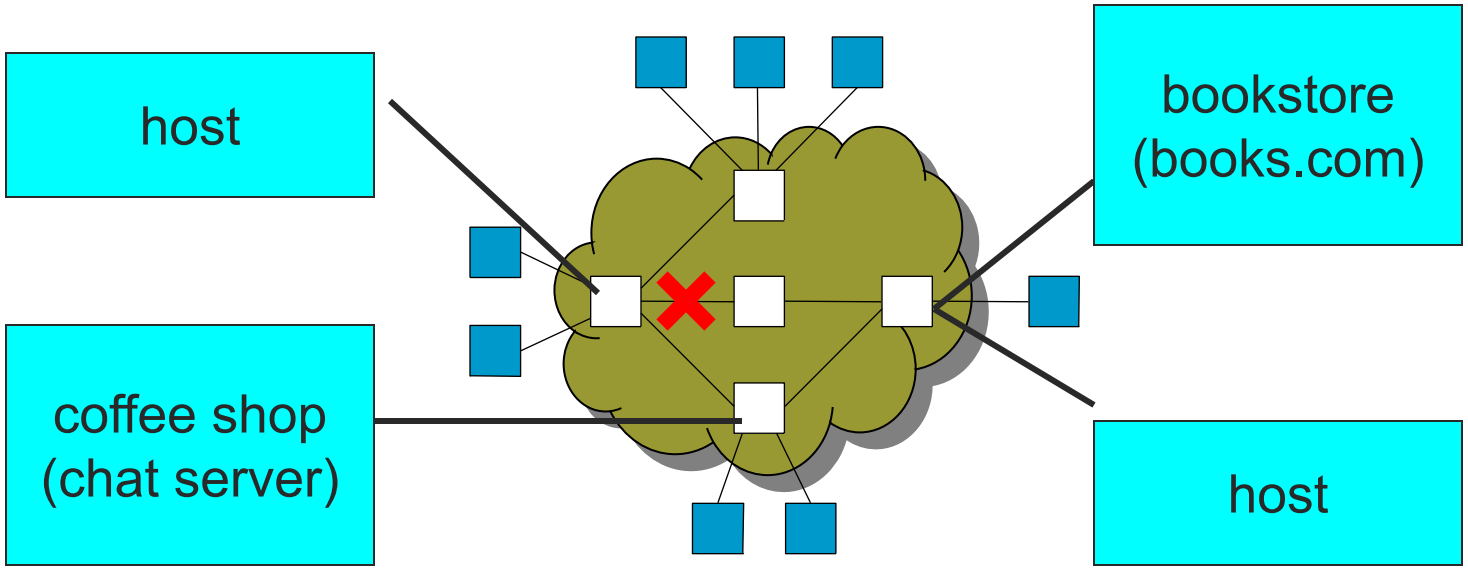

second challenge: routing

How do we maintain forwarding information?

© CS 438 Staff, University of Illinois

Challenges

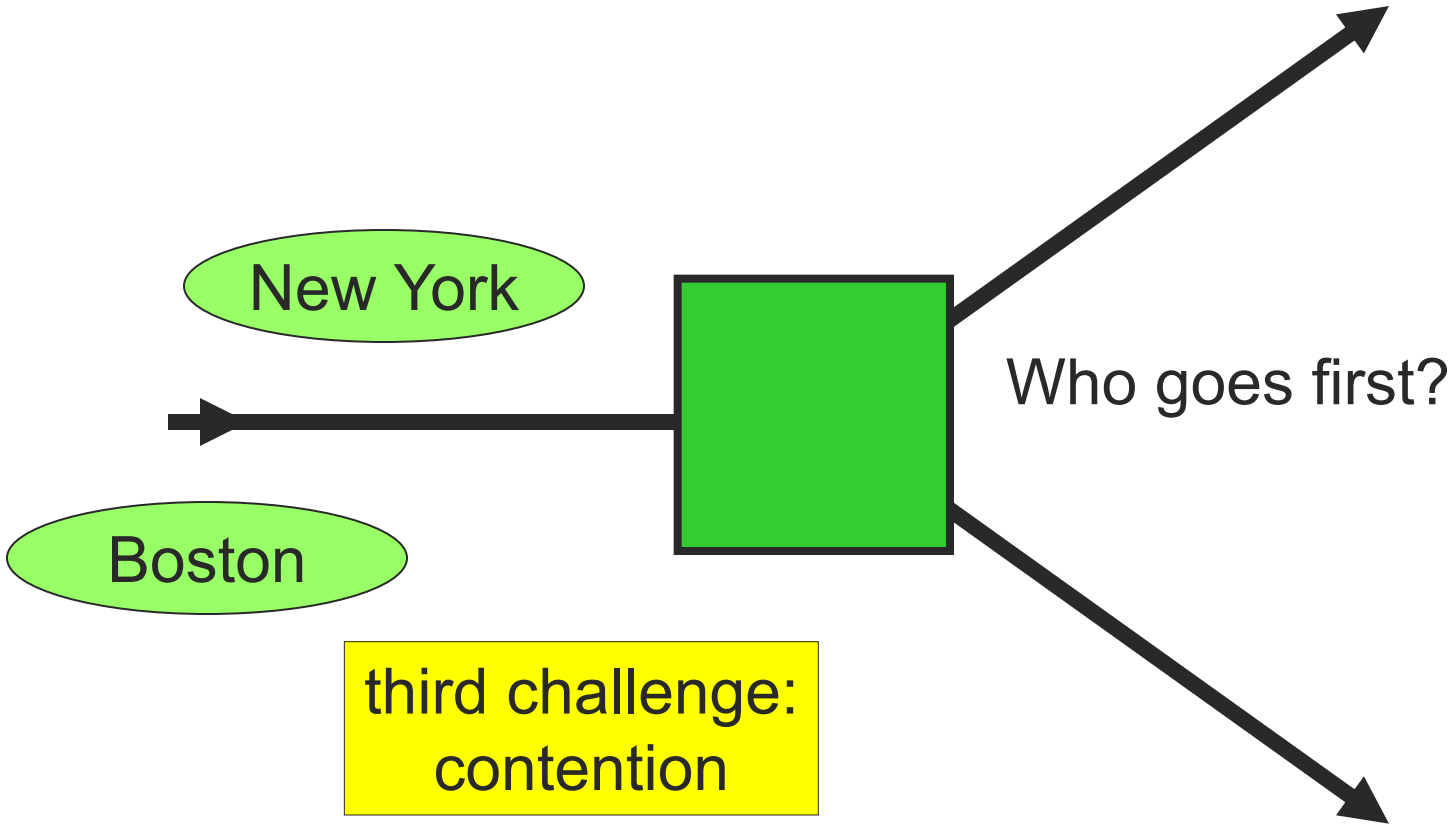

© CS 438 Staff, University of Illinois

Challenges

- Efficient forwarding
  - Switch with several output ports
  - Decide which output port to use
- Routing in dynamic network
  - Need information for forwarding
  - Construct and maintain the information
- Handling contention
  - Multiple packets destined for one output port
  - Decide which packet goes first
  - Decide what to do with others

© CS 438 Staff, University of Illinois

Network Layers and Switches

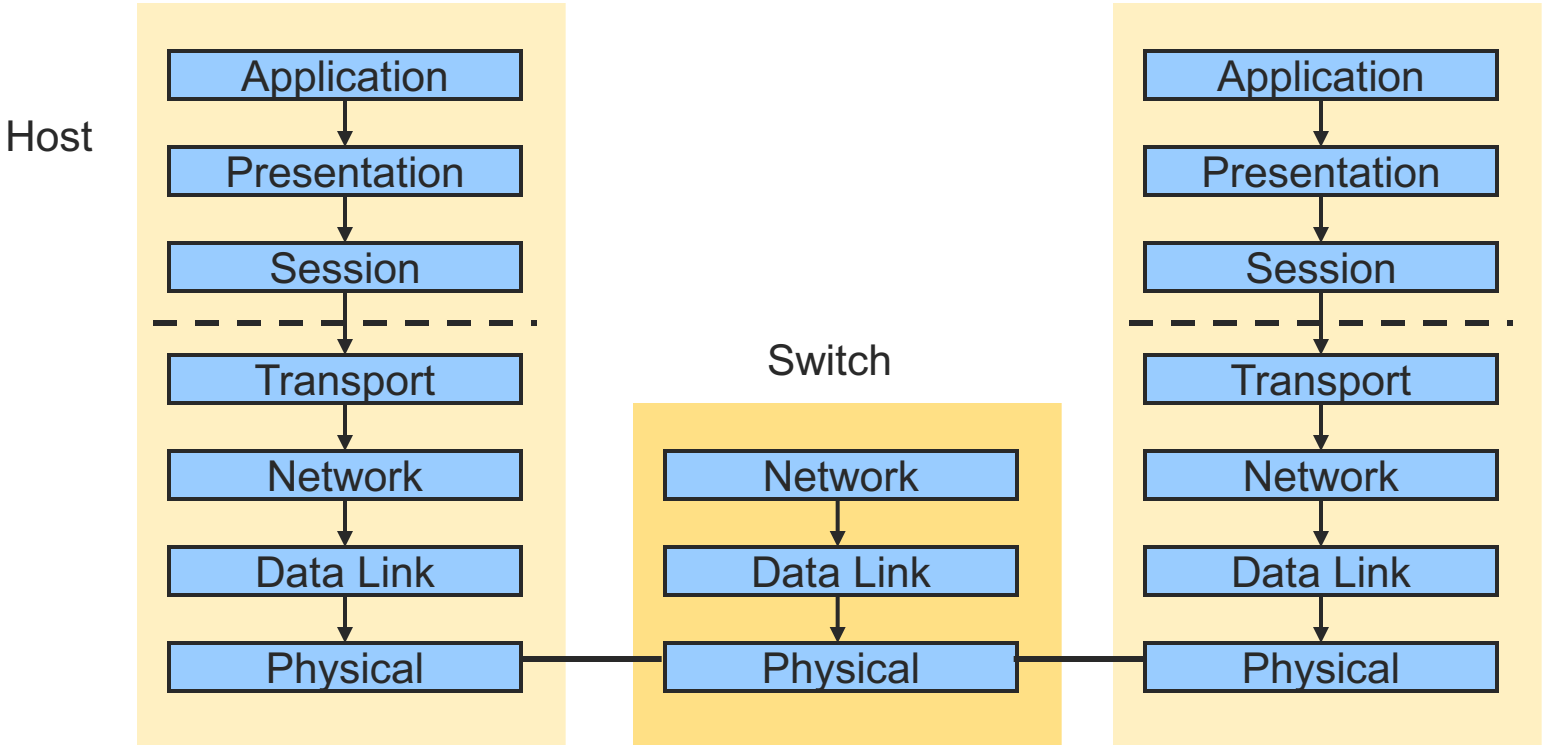

© CS 438 Staff, University of Illinois

Network Layers and Switches

switch between different physical layers

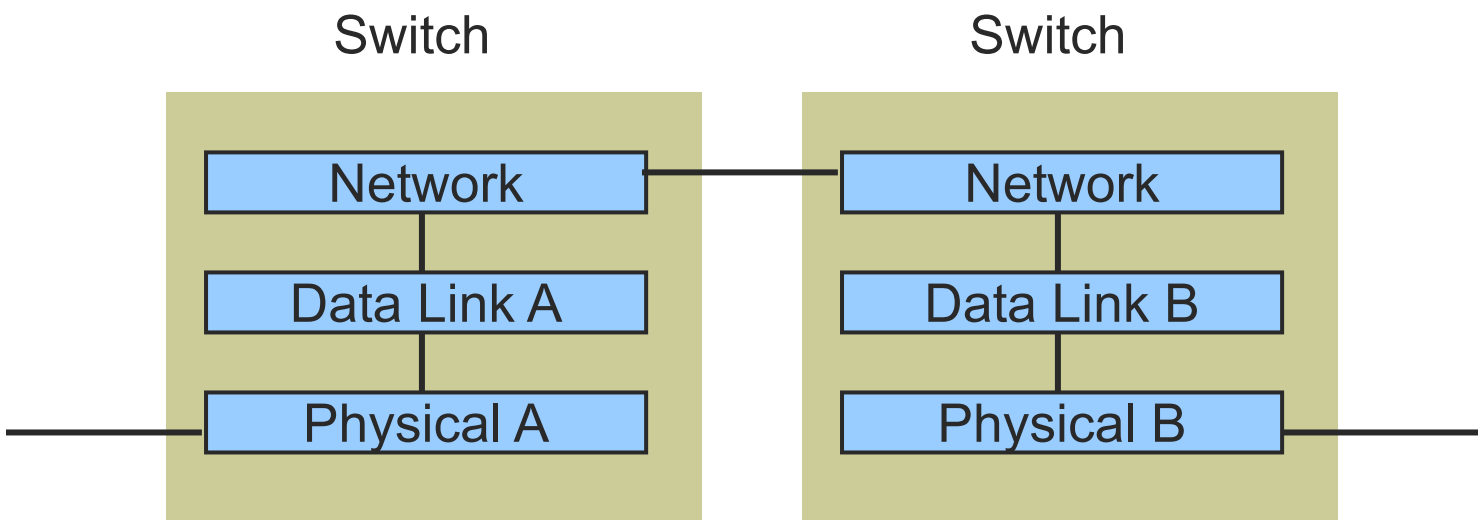

© CS 438 Staff, University of Illinois

Switching task: Translate betw. lower-layer technologies

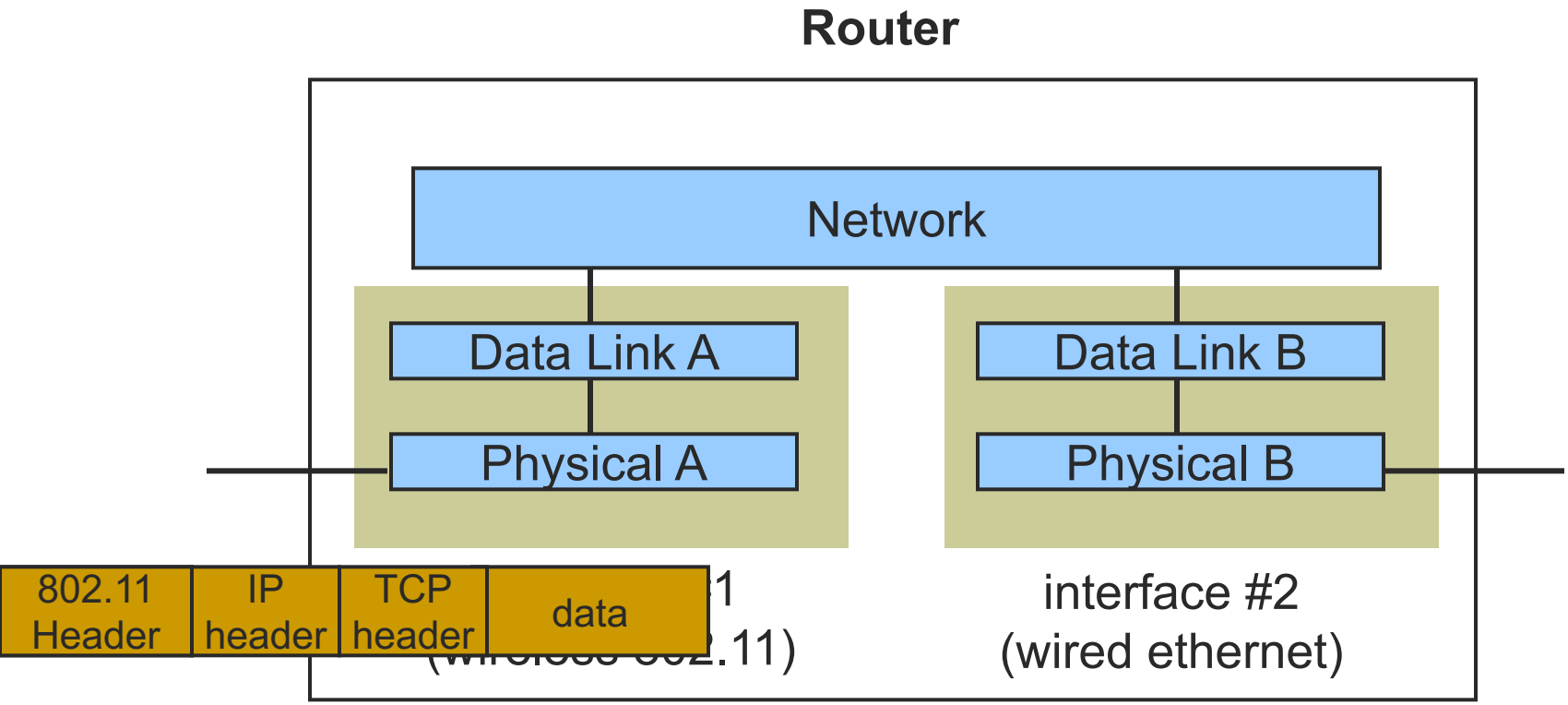

Switching and Forwarding

- Switch
  - A switch forwards packets from input ports to output ports
    - Port selection is based on the destination address in the packet header
  - Advantages
    - Can build networks that cover large geographic areas
    - Can build networks that support large numbers of hosts
    - Can add new hosts without affecting the performance of existing hosts

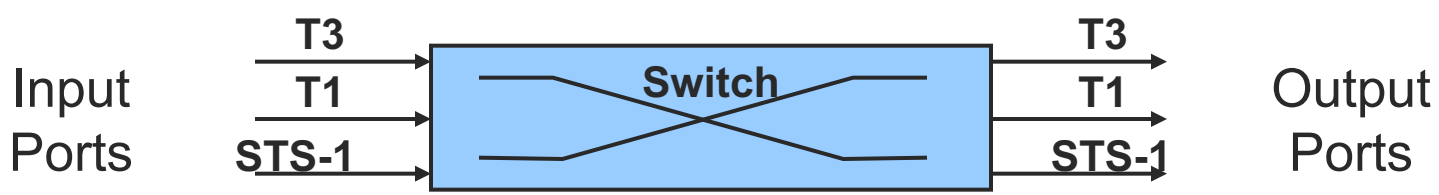

© CS 438 Staff, University of Illinois

Router/switch Architecture

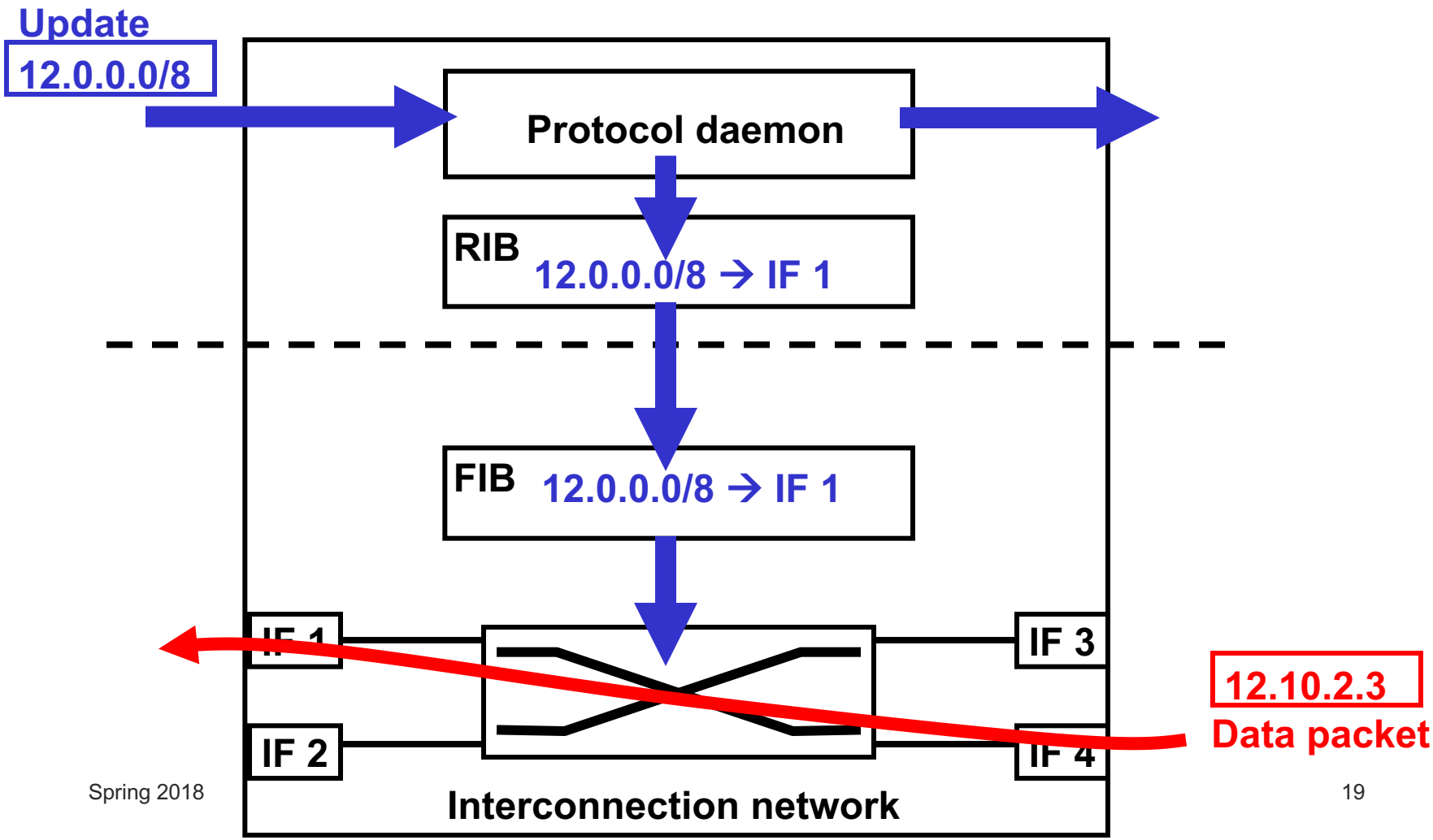

Switching and Forwarding

- Forwarding
  - The task of specifying an appropriate output port for a packet
    - Datagram
    - Virtual Circuit Switching
    - Source Routing
  - Each packet contains enough information for a switch to determine the correct output port
  - Later
    - Building forwarding tables – routing.

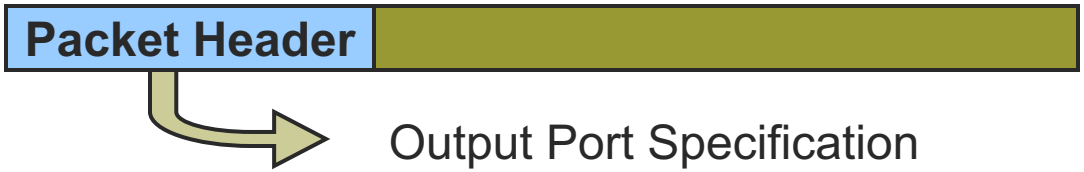

© CS 438 Staff, University of Illinois

Forwarding

- Packet switching
  - Data traffic divided into packets
    - Each packet contains its own header (with address)
    - Packets sent separately through the network
  - Destination reconstructs the message
  - Example: sending a letter through the postal system
- Circuit switching
  - Source first establishes a connection to the destination
    - Each router on the path may reserve bandwidth
  - Source sends data over the connection
    - No destination address, since routers know the path
  - Source tears down connection when done
  - Example: making a phone call on the telephone network

© CS 438 Staff, University of Illinois

Forwarding with Datagrams

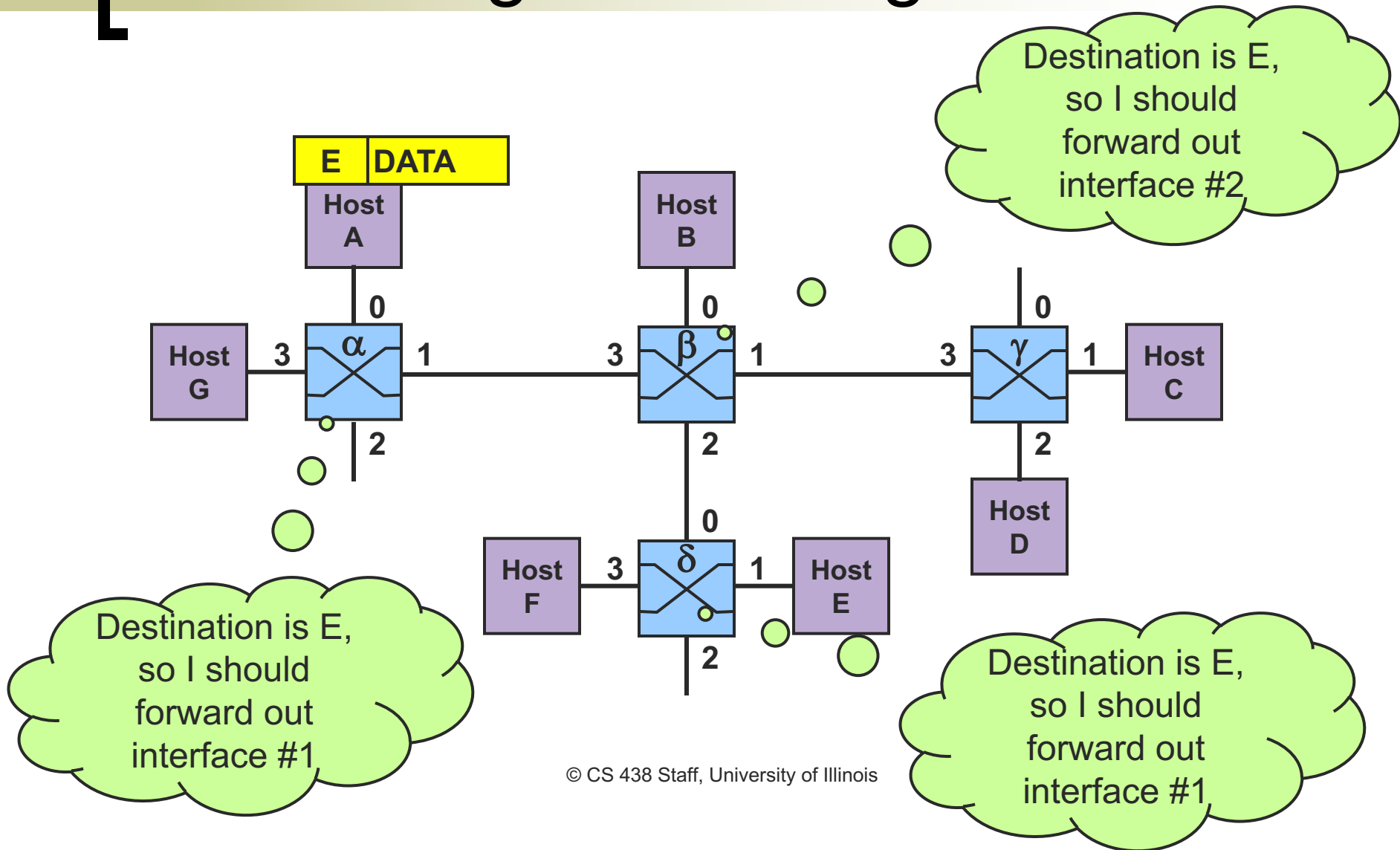

© CS 438 Staff, University of Illinois

Forwarding with Datagrams

- Connectionless
  - Each packet travels independently
- Switch
  - Translates global address to output port
  - Maintains table of translations
- Used in traditional data networks
  - i.e., Internet

© CS 438 Staff, University of Illinois

Forwarding Table

Each switch maintains a forwarding table that translates a host name to an output port

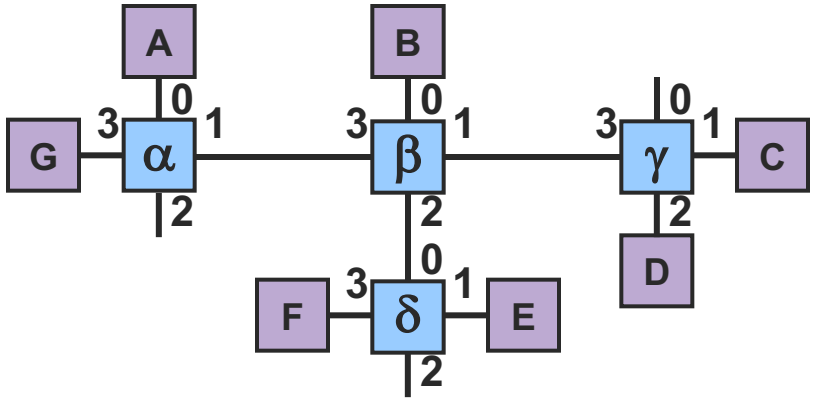

α's Table

A	0
B	1
C	1
D	1
E	1
F	1
G	3

β's Table

A	3
B	0
C	1
D	1
E	2
F	2
G	3

γ's Table

A	3
B	3
C	1
D	2
E	3
F	3
G	3

δ's Table

A	0
B	0
C	0
D	0
E	1
F	3
G	0

© CS 438 Staff, University of Illinois

Forwarding Table

Each switch maintains a forwarding table that translates a host name to an output port

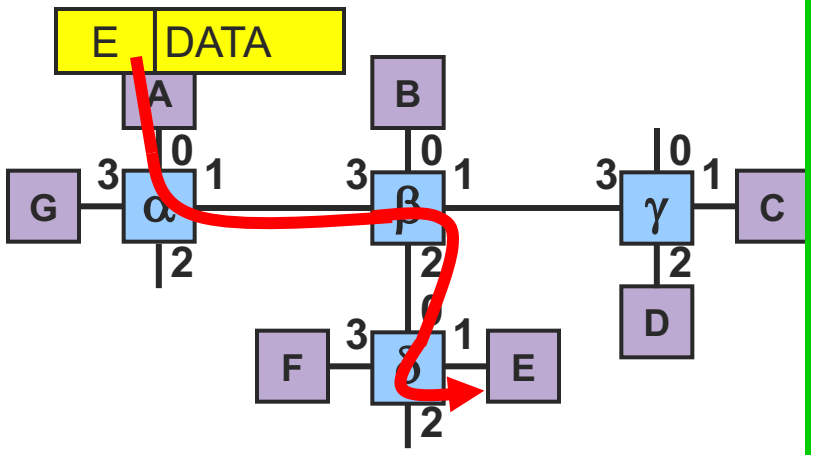

α's Table	
A	0
B	1
C	1
D	1
E	1
F	1
G	3

β's Table	
A	3
B	0
C	1
D	1
E	2
F	2
G	3

γ's Table	
A	3
B	3
C	1
D	2
E	3
F	3
G	3

δ's Table	
A	0
B	0
C	0
D	0
E	1
F	3
G	0

© CS 438 Staff, University of Illinois

Forwarding with Datagrams

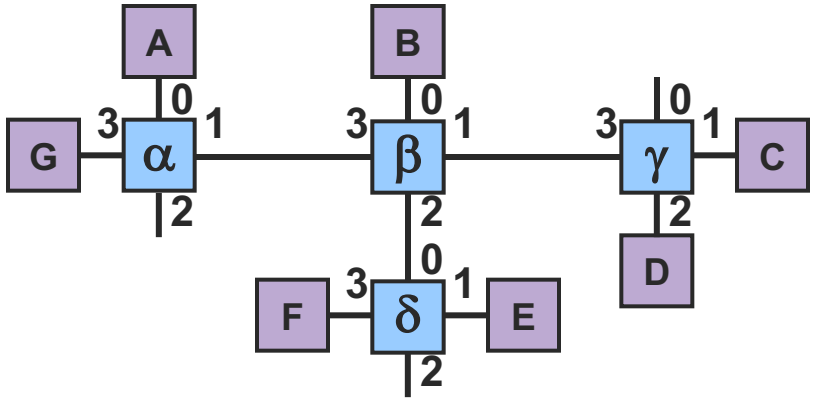

What happens to the last packet?

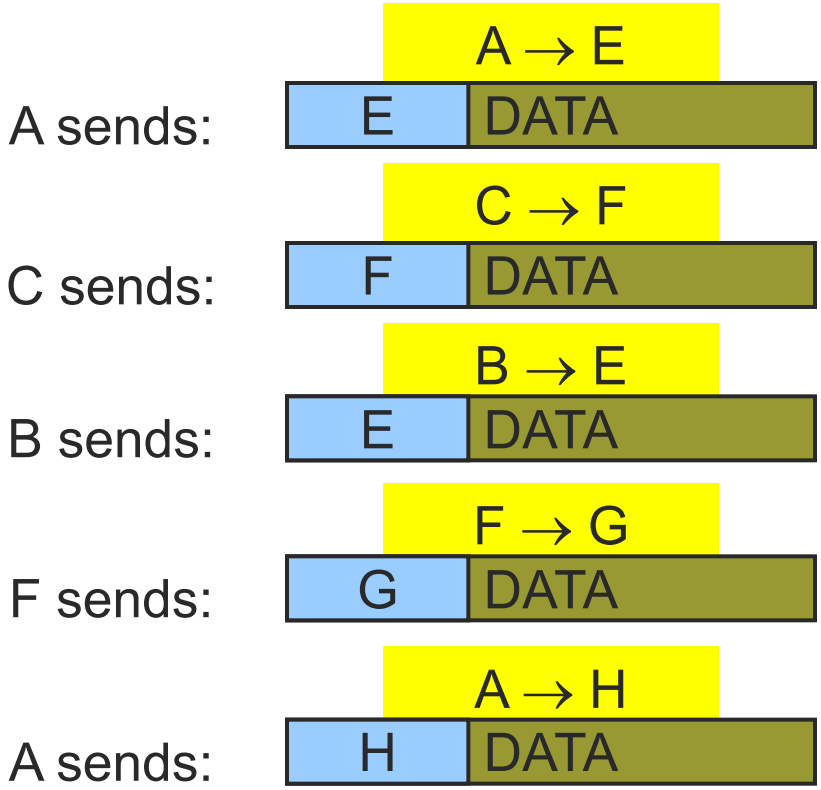

© CS 438 Staff, University of Illinois

Forwarding with Datagrams

- Analogous to following signs
- Advantages
  - Can send packets immediately
  - All necessary information in packet header
  - Can route around failures dynamically
- Disadvantages
  - Header requires full unique address
  - Might not be possible to deliver packet
  - Successive packets may not follow the same route
  - Global address to path translations requires significant storage

© CS 438 Staff, University of Illinois

Forwarding

- Packet switching
  - Data traffic divided into packets
    - Each packet contains its own header (with address)
    - Packets sent separately through the network
  - Destination reconstructs the message
  - Example: sending a letter through the postal system
- Circuit switching
  - Source first establishes a connection to the destination
    - Each router on the path may reserve bandwidth
  - Source sends data over the connection
    - No destination address, since routers know the path
  - Source tears down connection when done
  - Example: making a phone call on the telephone network

© CS 438 Staff, University of Illinois

Forwarding with Circuit Switching

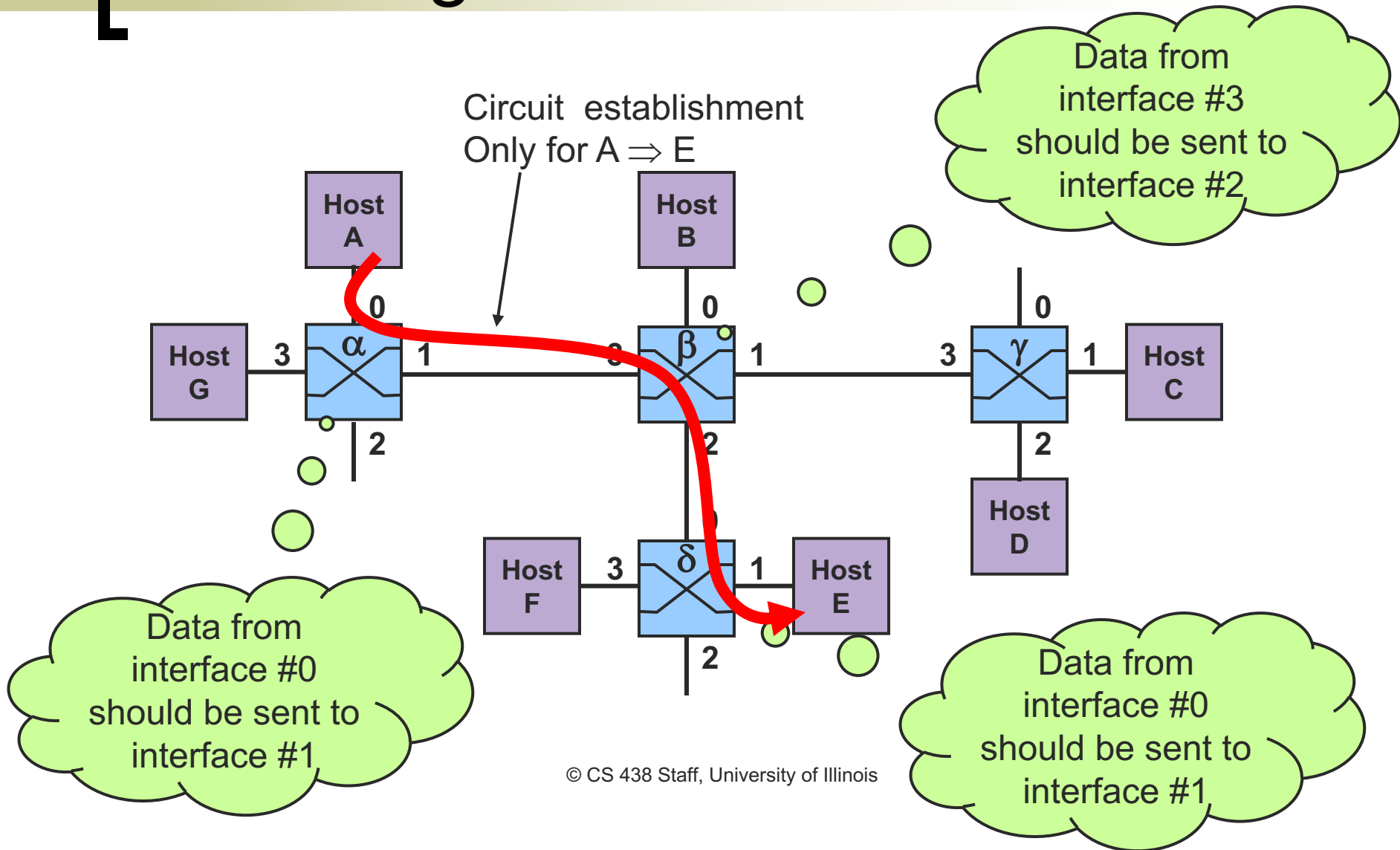

© CS 438 Staff, University of Illinois

Forwarding with Virtual Circuits

- Connection oriented
  - Requires explicit setup and teardown
  - Packets follow established route
- Why support connections in a network?
  - Useful for service notions
  - Important for telephony

© CS 438 Staff, University of Illinois

Virtual Circuits: The Circuit

- Logical circuit between source and destination
  - Packets from different VCs multiplex on a link
  - Used in ATM, MPLS, Intserv

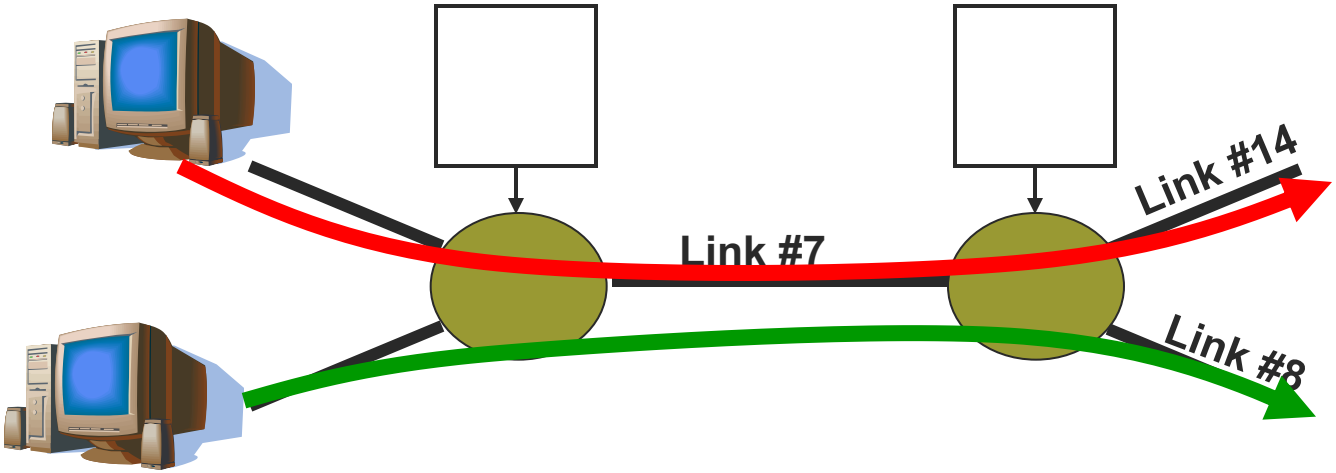

© CS 438 Staff, University of Illinois

Virtual Circuits: The Circuit

- Identified by Virtual Circuit Identifier (VCI)
  - Source setup: establish path for each VC
  - Switch: mapping VCI to outgoing link
  - Packet: fixed-length label in packet header

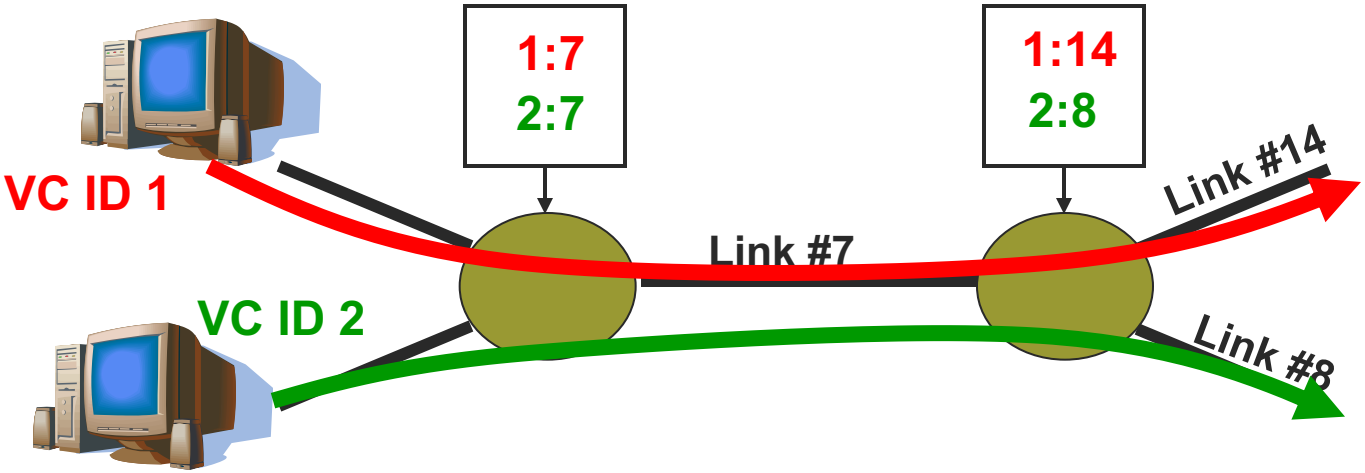

© CS 438 Staff, University of Illinois

Forwarding with Virtual Circuits

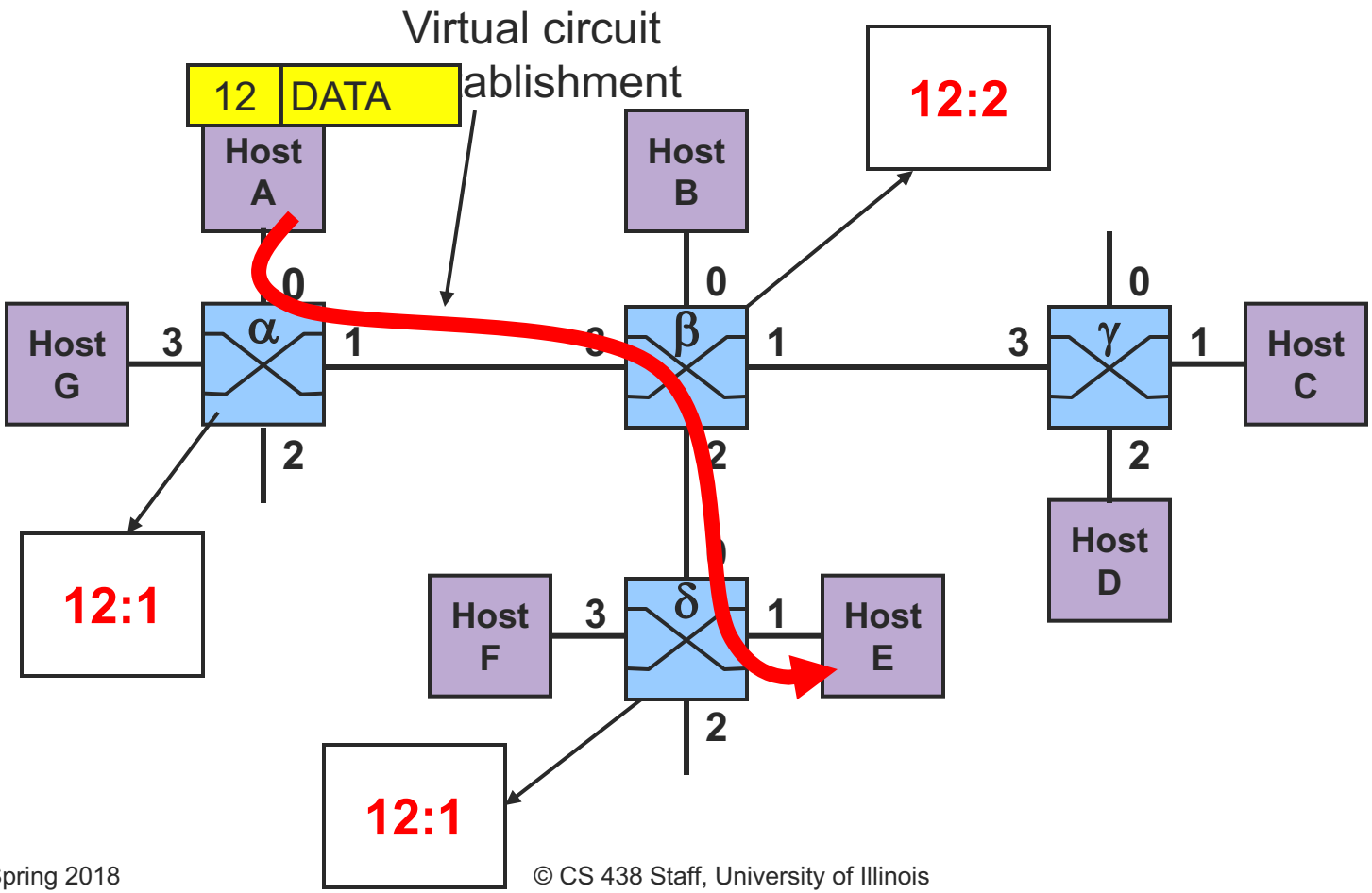

© CS 438 Staff, University of Illinois

Virtual Circuits: Label Swapping

- Problem: using VCI along the whole path
  - Each virtual circuit consumes a unique ID
  - Starts to use up all of the ID space in the network

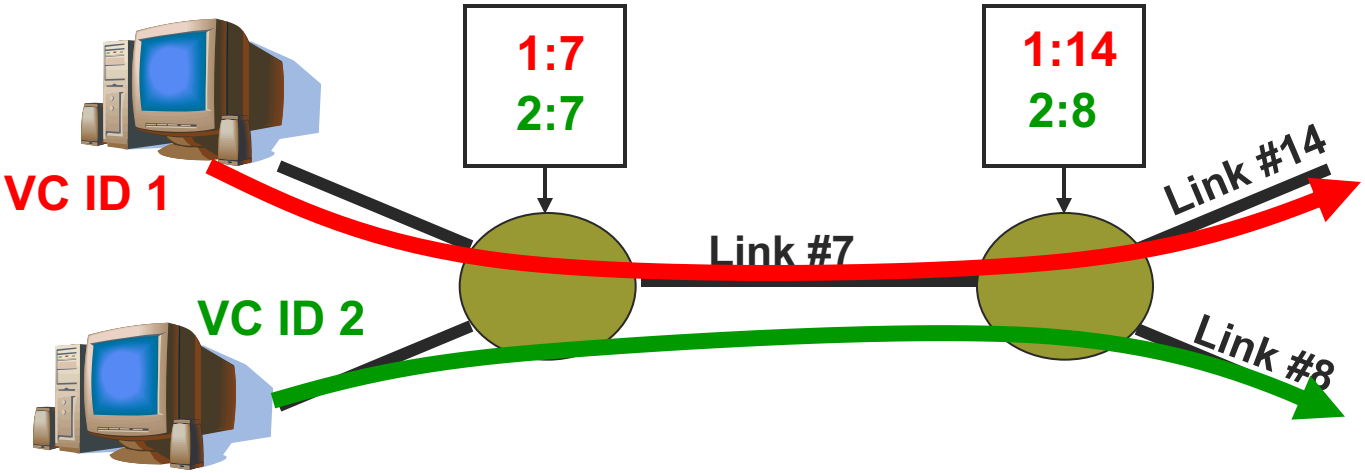

© CS 438 Staff, University of Illinois

Virtual Circuits: Label Swapping

- Solution: Label swapping / label switching (used, e.g., in MPLS)
  - Map the VCI to a new value at each hop
    - Table has old ID, next link, and new ID
  - Allows reuse of IDs at different links

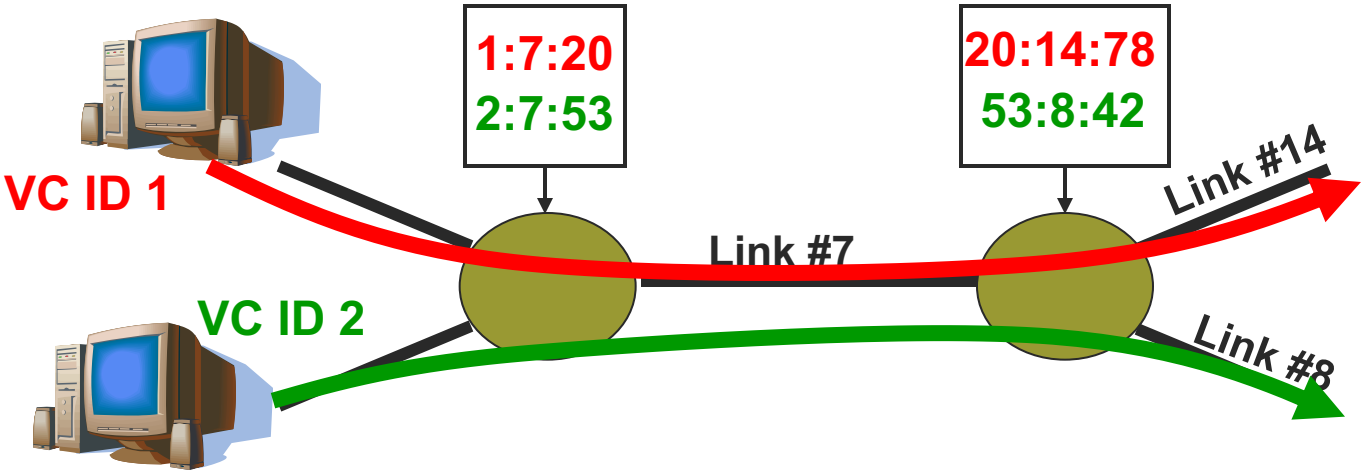

© CS 438 Staff, University of Illinois

Forwarding with Virtual Circuits

- Set up
  - A virtual circuit identifier (VCI) is assigned to the circuit for each link it traverses
  - VCI is locally significant
  - <incoming port, incoming VCI> uniquely identifies VC
  - Set up is the job of a signaling protocol
    - Switched Virtual Circuits (SVC)
    - Or static "permanent" configuration (less common): Permanent Virtual Circuits (PVC)
- Switch
  - Maintains a translation table from <incoming port, incoming VCI> to <outgoing port, outgoing VCI>

© CS 438 Staff, University of Illinois

Forwarding with Virtual Circuits

- A simple example setup protocol
  - Each host and switch maintains per-link local variable for VCI assignment
  - When setup frame leaves host/switch
    - Assign outgoing VCI
    - Increment assignment counter
  - Port and circuit id combination is unique
  - Switches maintain translation table from
    - incoming port/VCI pair to
    - outgoing port/VCI pair

© CS 438 Staff, University of Illinois

Forwarding with Virtual Circuits

- Assumptions
  - Circuits are simplex
    - On a duplex link, the same VCI can be used for two circuits, one in each direction
  - The same VCI can be used on different ports of the same switch
  - At setup, the lowest available VCI is used

© CS 438 Staff, University of Illinois

Setting up Virtual Circuit A→E

Port IN	VCI IN	Port OUT	VCI OUT	Valid ?
0	0	1	0	no

Port IN	VCI IN	Port OUT	VCI OUT	Valid ?
3	0	2	0	no

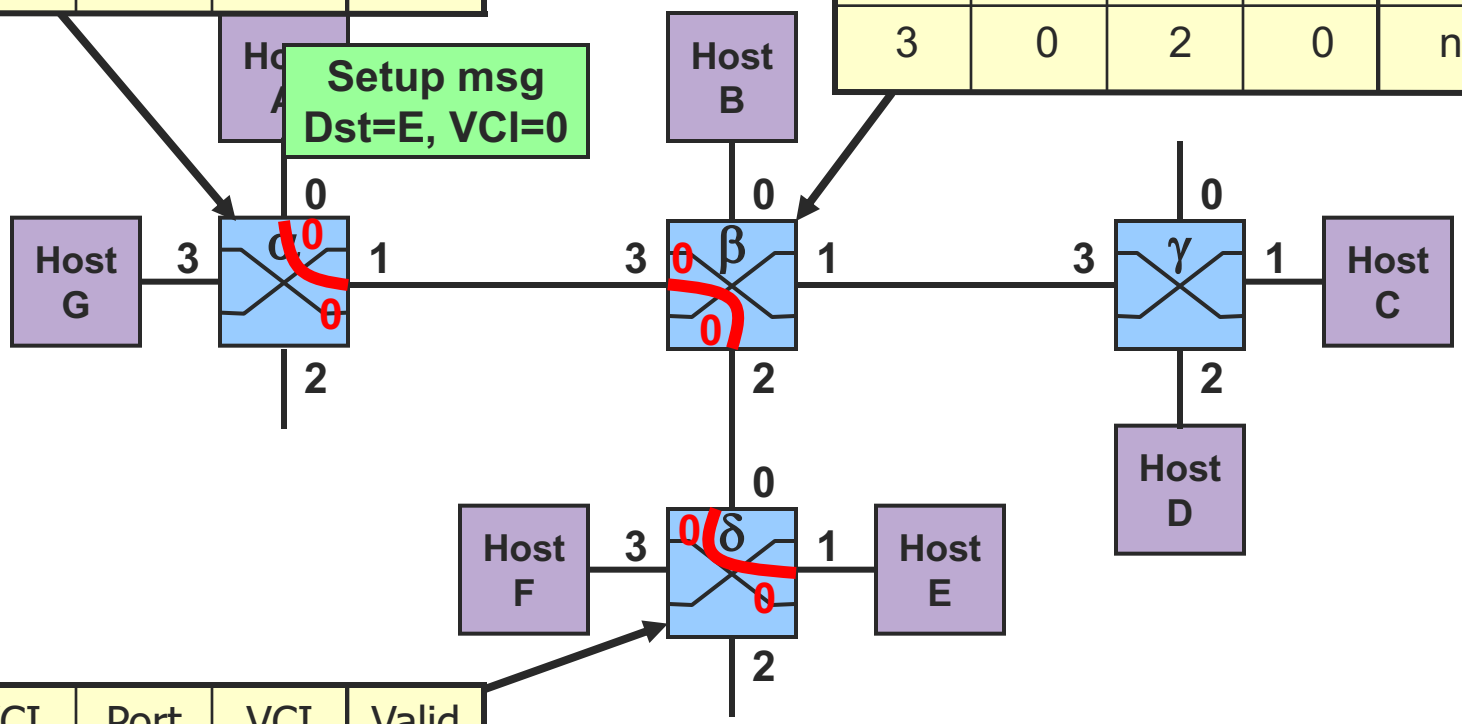

Port IN	VCI IN	Port OUT	VCI OUT	Valid ?
0	0	1	0	no

© CS 438 Staff, University of Illinois

Setting up Virtual Circuit A→E

Port IN	VCI IN	Port OUT	VCI OUT	Valid ?
0	0	1	0	~~no~~ yes

Port IN	VCI IN	Port OUT	VCI OUT	Valid ?
3	0	2	0	~~no~~ yes

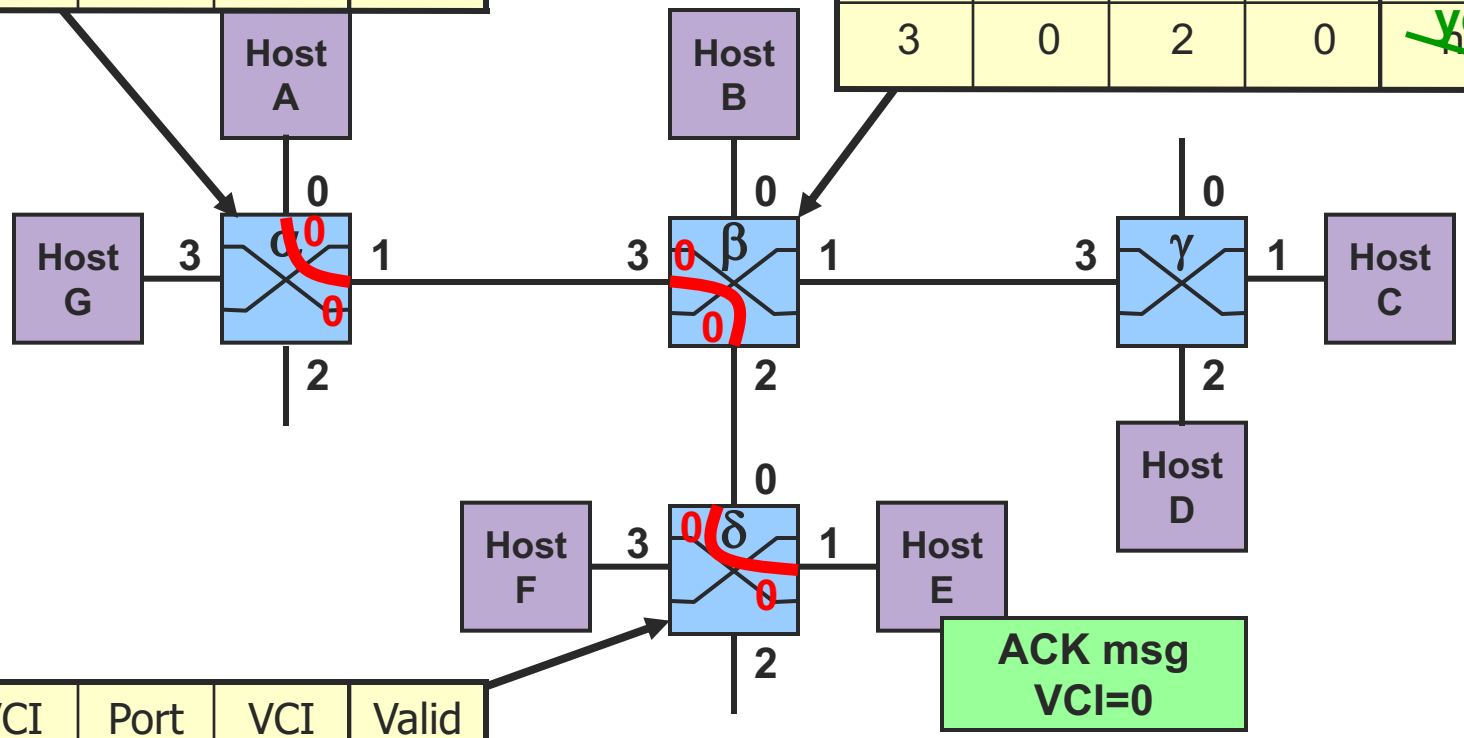

Port IN	VCI IN	Port OUT	VCI OUT	Valid ?
0	0	1	0	~~no~~ yes

© CS 438 Staff, University of Illinois

Virtual Circuit G→C

Port IN	VCI IN	Port OUT	VCI OUT	Valid ?
0	0	1	0	yes
3	0	1	1	~~no~~ yes

Port IN	VCI IN	Port OUT	VCI OUT	Valid ?
3	0	2	0	yes
3	1	1	0	~~no~~ yes

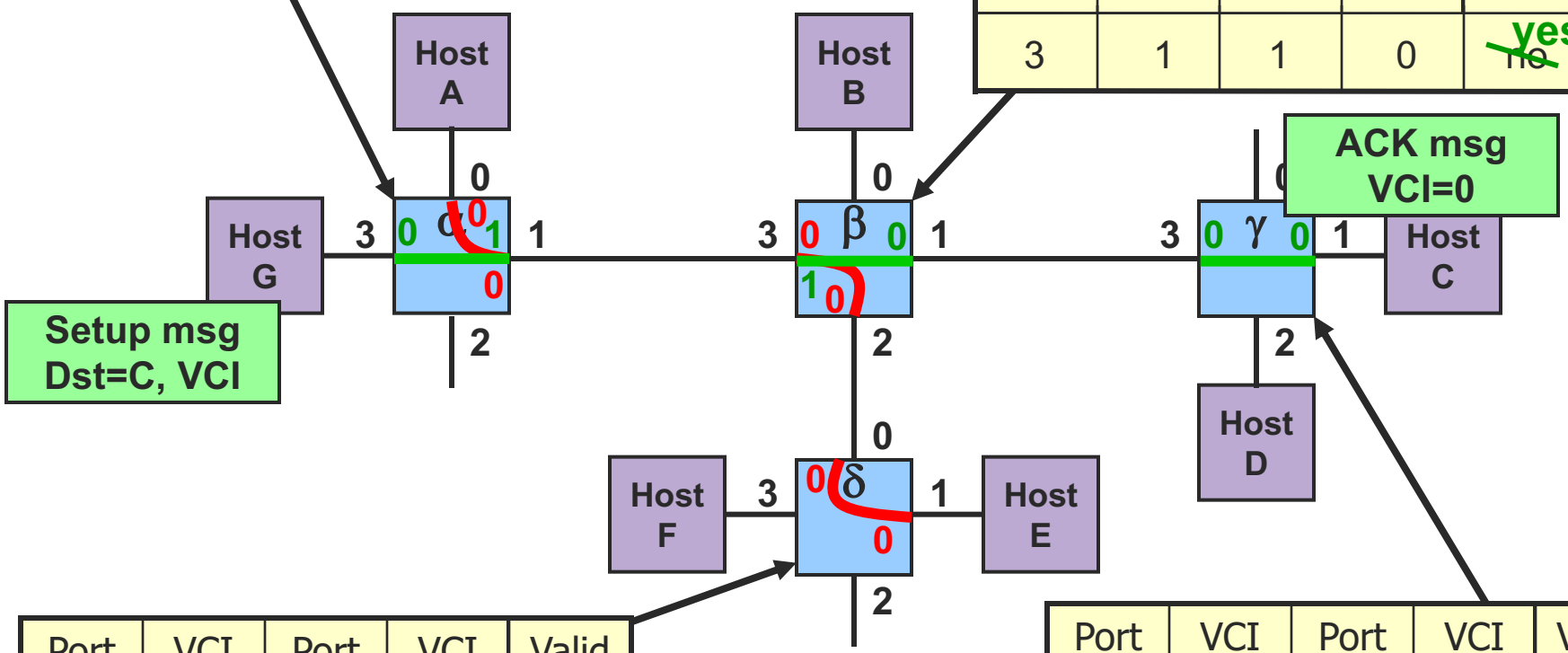

Port IN	VCI IN	Port OUT	VCI OUT	Valid ?
0	0	1	0	yes

Port IN	VCI IN	Port OUT	VCI OUT	Valid ?
3	0	1	0	~~no~~ yes

© CS 438 Staff, University of Illi

Forwarding with Virtual Circuits

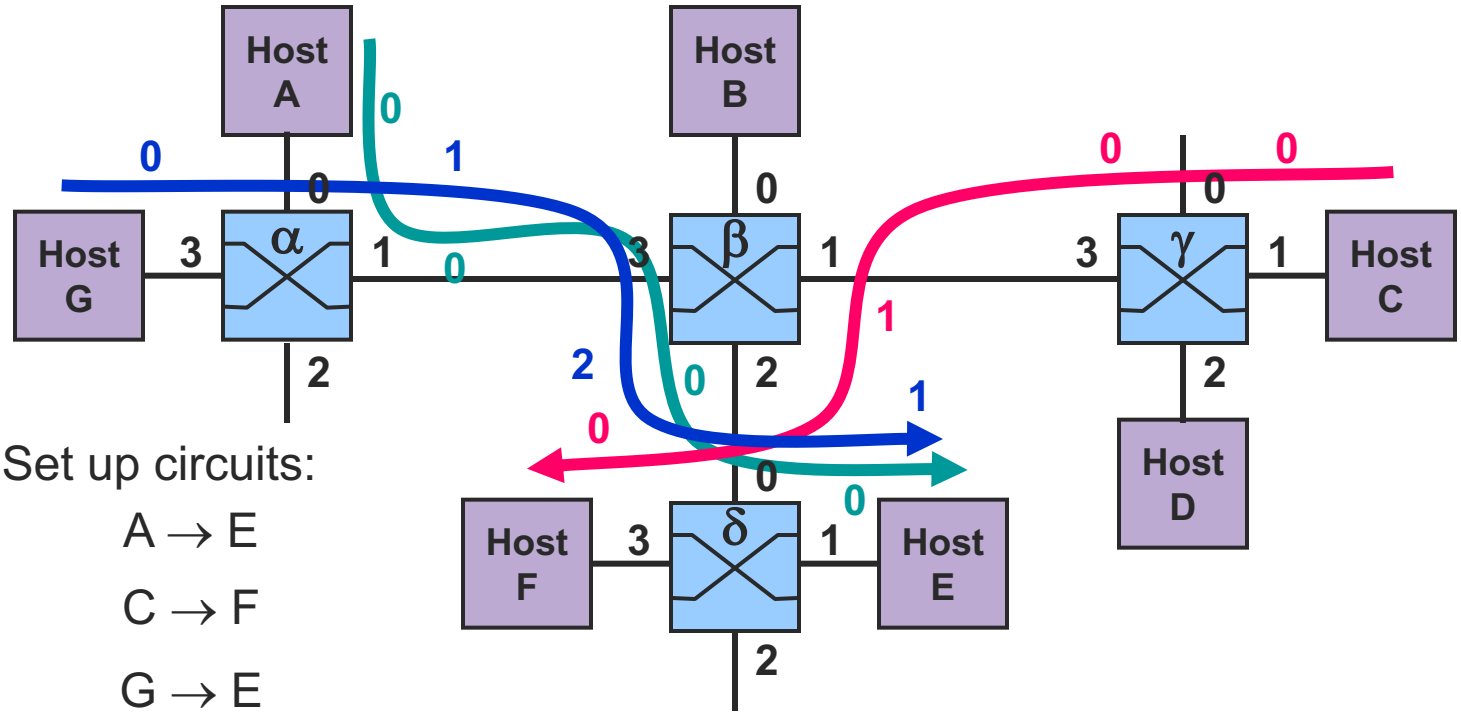

Set up circuits:

A → E

C → F

G → E

© CS 438 Staff, University of Illinois

Forwarding with Virtual Circuits

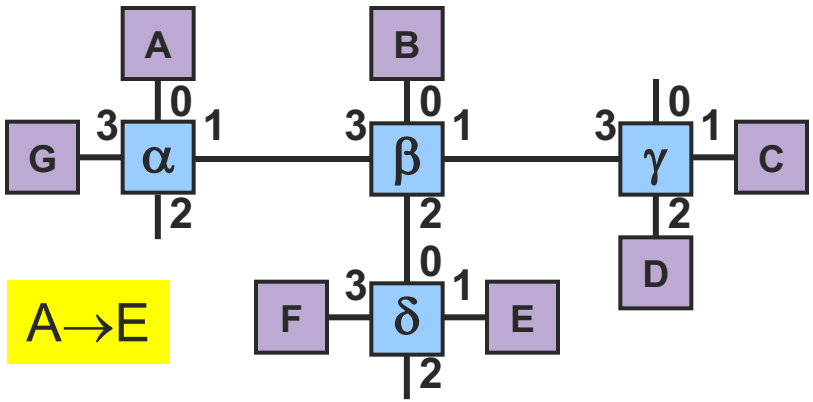

Table entries after A→E connection is set

δ

Port IN	VCI IN	Port OUT	VCI OUT
0	0	1	0

α

Port IN	VCI IN	Port OUT	VCI OUT
0	0	1	0

β

Port IN	VCI IN	Port OUT	VCI OUT
3	0	2	0

© CS 438 Staff, University of Illinois

Forwarding with Virtual Circuits

Table entries after A→E, C→F, G→E connection is set

α

Port IN	VCI IN	Port OUT	VCI OUT
0	0	1	0
3	0	1	1

β

Port IN	VCI IN	Port OUT	VCI OUT
1	0	2	1
3	0	2	0
3	1	2	2

δ

Port IN	VCI IN	Port OUT	VCI OUT
0	0	1	0
0	1	3	0
0	2	1	1

γ

Port IN	VCI IN	Port OUT	VCI OUT
1	0	3	0

© CS 438 Staff, University of Illinois

Forwarding with Virtual Circuits

- Analogous to a game of following a sequence of clues
- Advantages
  - Header (for a data packet) requires only virtual circuit ID
    - Connection request contains global address
  - Can reserve resources at setup time
- Disadvantages
  - Typically must wait one RTT for setup
  - Cannot dynamically avoid failures, must reestablish connection
  - Global address path information still necessary for connection setup

© CS 438 Staff, University of Illinois

Similarities between virtual circuits and datagrams

- Data divided into packets
- Store-and-forward transmission
- Packets multiplexed onto links

© CS 438 Staff, University of Illinois

Differences between virtual circuits and datagrams

- Forwarding lookup
  - IP: longest prefix match
  - VC: circuit ID
- Connection setup
  - IP: send packets on-demand
  - VC: set up circuit in advance
- Router state
  - IP: no per-circuit state, easier failure recovery
  - VC: routers know about connections
- Quality of service
  - IP: no reservations, no guarantees
  - VC: reserved bandwidth, soft QoS guarantees

© CS 438 Staff, University of Illinois

Circuit switching vs. Datagram switching

	Advantages	Disadvantages
Circuits	1. Guaranteed bandwidth 2. Simple Abstraction 3. Simple forwarding 4. Low per-packet overhead	1. Wasted bandwidth 2. Blocked connections 3. No communication until channel set up 4. Routers need per-connection state
Datagrams	1. Better stat. multiplexing 2. Offers “okay” service to everyone 3. No set-up delay 4. Routers only store aggregated routes	1. Unpredictable performance 2. Lost, out of order packets 3. More complex forwarding (prefix matching) 4. Packet header overhead

© CS 438 Staff, University of Illinois

Forwarding with Source Routing

- Packet header specifies directions
  - One direction per switch
    - Absolute
      - Port name
      - Next switch name
    - Relative
      - Turn clockwise 3 ports
  - Switches may delete or rotate directions within packet headers

© CS 438 Staff, University of Illinois

Forwarding with Source Routing

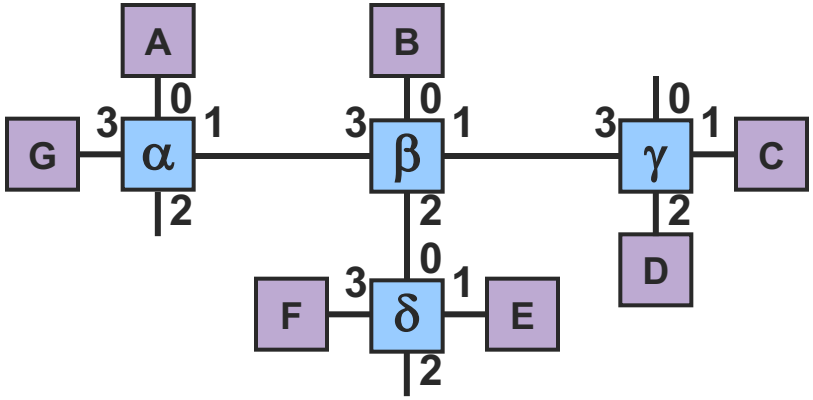

What happens to the last packet?

A sends: A → E

1	2	1	DATA

C sends: C → F

3	2	3	DATA

B sends: B → E

2	1	DATA

F sends: F → G

0	2	3	DATA

A sends: A → H

1	1	2	1	DATA

© CS 438 Staff, University of Illinois

Forwarding with Source Routing

- Analogous to following directions
- Advantages
  - Simple switches
  - Fast and cheap
- Disadvantages
  - Hosts must know entire topology
  - Changes must propagate to all hosts
  - Headers might get large

© CS 438 Staff, University of Illinois

Forwarding Performance

- General purpose work station
  - Direct memory access (DMA)
  - Supports multiple network interface cards (NICs)

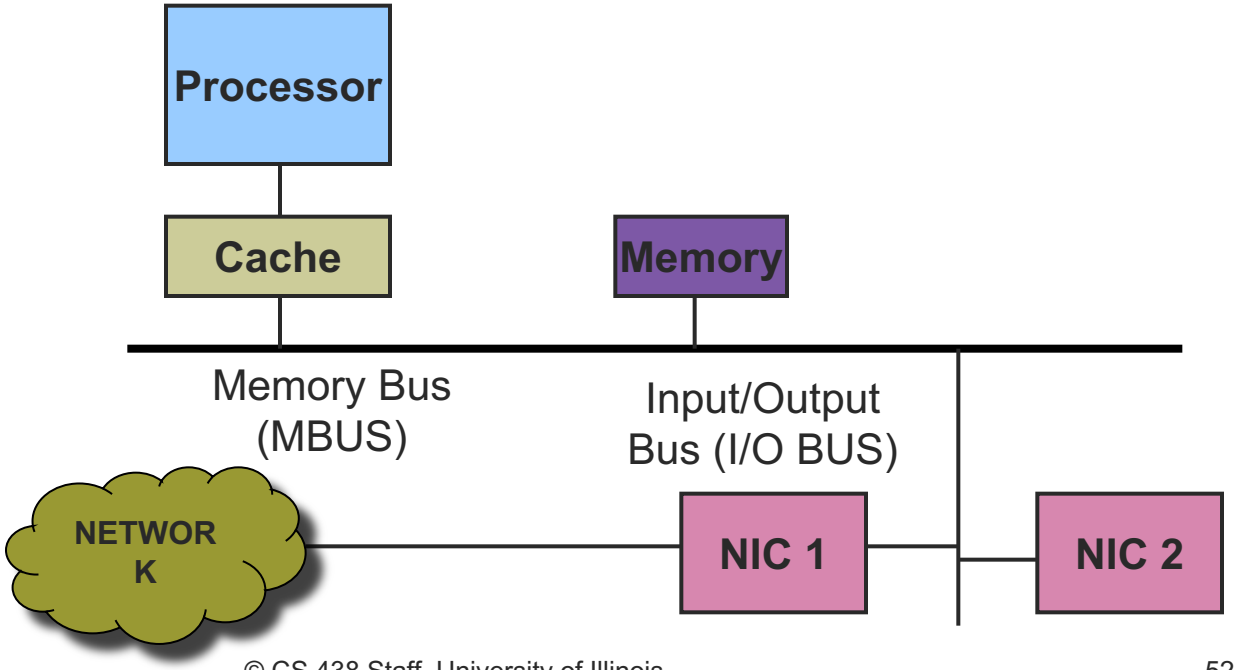

© CS 438 Staff, University of Illinois

Forwarding Performance

- Switching process
  - Packet arrives on NIC 1
  - NIC 1 DMA's packet into memory
  - CPU looks at header, decides to send out on NIC 2
  - NIC 2 DMA's packet into NIC memory
  - Packet leaves via NIC 2

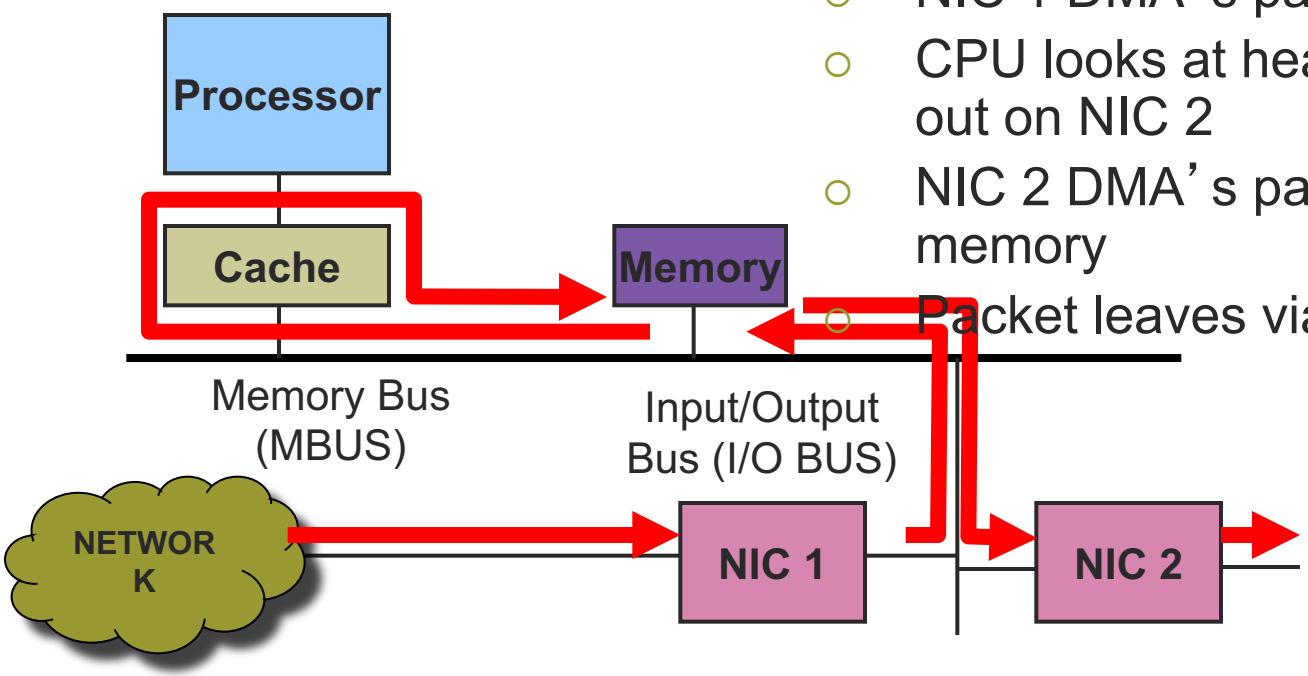

What are the potential bottlenecks?

© CS 438 Staff, University of Illinois

Forwarding Performance

- Potential Bottlenecks
  - I/O bus bandwidth
  - Memory bus bandwidth
  - Processor computing power
- Example
  - Workstation – switches 100,000 pps
  - Average packet size = 64 bytes
  - Throughput
    - = pps x (BitsPerPacket)
    - = $100 \times 10^3 \times 64 \times 8$
    - = 51.2×10^6

© CS 438 Staff, University of Illinois

Bridges and LAN Switches

© CS 438 Staff, University of Illinois

Bridges: Building Extended LAN's

- Traditional LAN
  - Shared medium (e.g., Ethernet)
  - Cheap, easy to administer
  - Supports broadcast traffic
- Problem
  - Scale
    - Larger geographic area (> O(1 km))
    - More hosts (> O(100))
  - Retain LAN-like functionality

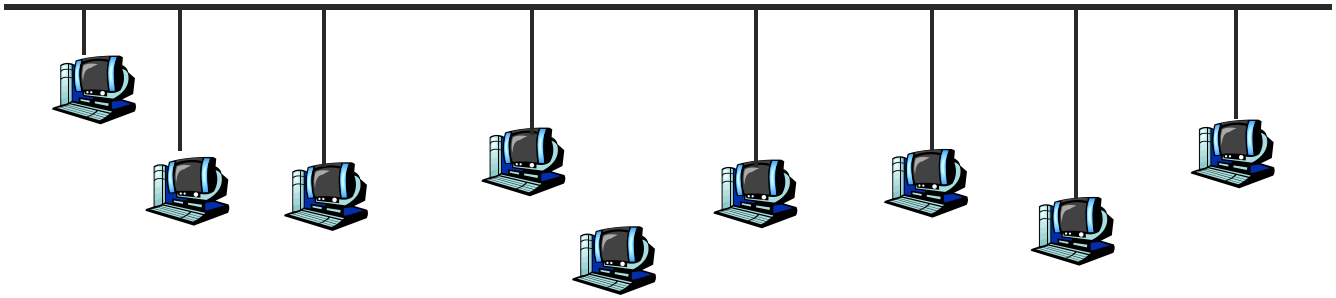

© CS 438 Staff, University of Illinois

Bridges: Building Extended LAN's

- Traditional LAN
  - Shared medium (e.g., Ethernet)
  - Cheap, easy to administer
  - Supports broadcast traffic
- Problem
  - Scale
    - Larger geographic area (> O(1 km))
    - More hosts (> O(100))
  - Retain LAN-like functionality

Solution: bridges

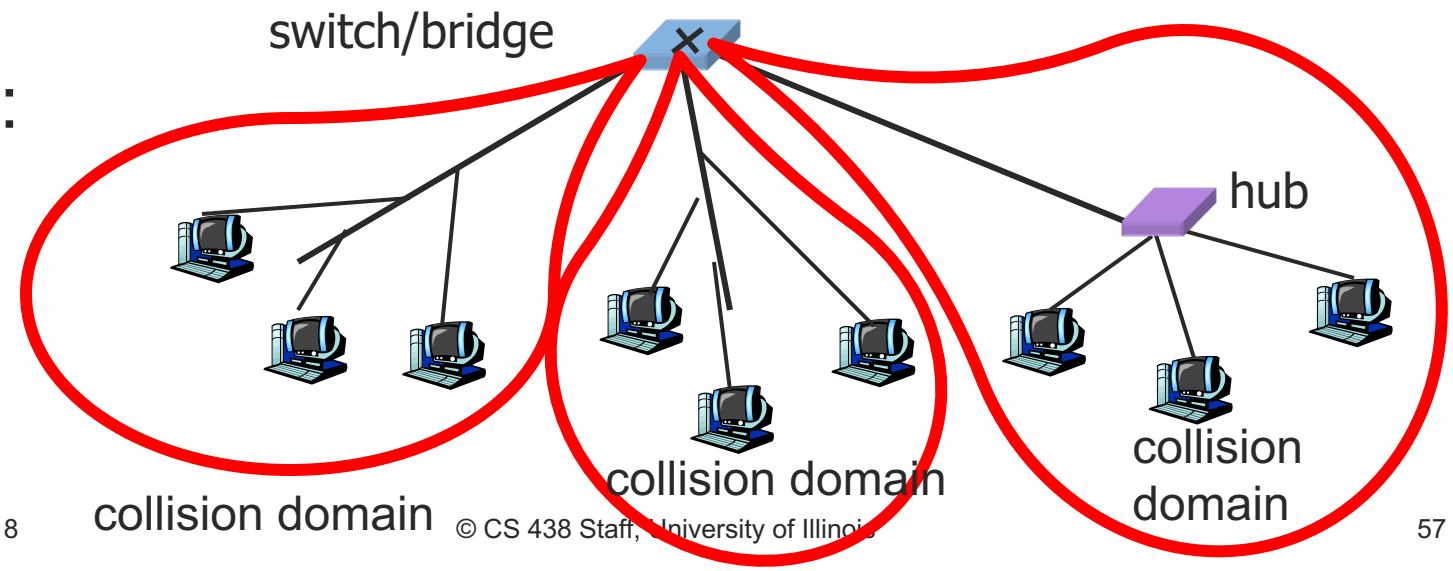

© CS 438 Staff, University of Illinois

Bridges (LAN Switches)

- Connect two or more LANs at the link layer (traditionally)
  - Extract destination address from the frame
  - Look up the destination in a table
  - Forward the frame to the appropriate LAN segment
    - Or point-to-point link, for higher-speed Ethernet
    - Each segment is its own collision domain
- A collection of LANs connected by bridges is called an extended LAN

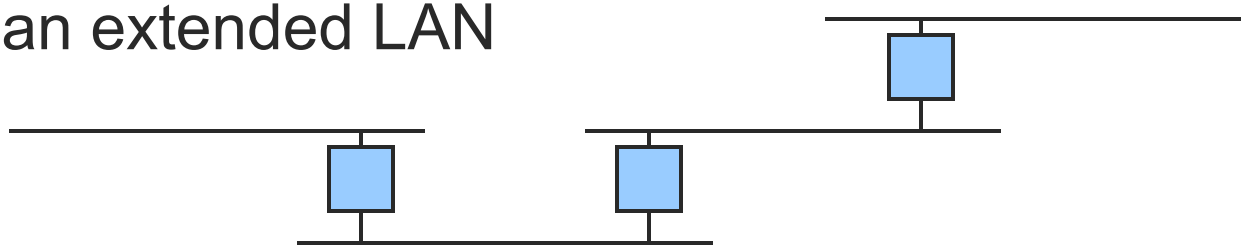

© CS 438 Staff, University of Illinois

Bridges vs. Switches

- Switch
  - Receive frame on input port
  - Translate address to output port
  - Forward frame
- Bridge
  - Connect shared media
  - All ports bidirectional
  - Repeat subset of traffic
    - Receive frame on one port
    - Send on all other ports

© CS 438 Staff, University of Illinois

Uses and Limitations of Bridges

- Bridges
  - Extend LAN concept
  - Limited scalability
    - to O(1,000) hosts
    - not to global networks
  - Not heterogeneous
    - some use of address, but
    - no translation between frame formats
- Bridge outline
  - Learning bridges
  - Spanning tree algorithm
  - Broadcast and multicast

© CS 438 Staff, University of Illinois

Learning Bridges

- Problem
  - Which LANs should a frame be forwarded on?
- Trivial algorithm
  - Forward all frames on all (other) LAN's
  - Potentially heavy traffic and processing overhead
- Optimize by using address information
  - "Learn" which hosts live on which LAN
  - Maintain forwarding table
  - Only forward when necessary
  - Reduces bridge workload

© CS 438 Staff, University of Illinois

Learning Bridges

- Bridge learns table entries based on source address
  - When receive frame from A on port 1
    add A to list of hosts on port 1
  - Time out entries to allow movement of hosts
- Table is an "optimization", meaning it helps performance but is not mandatory
- Always forward broadcast frames

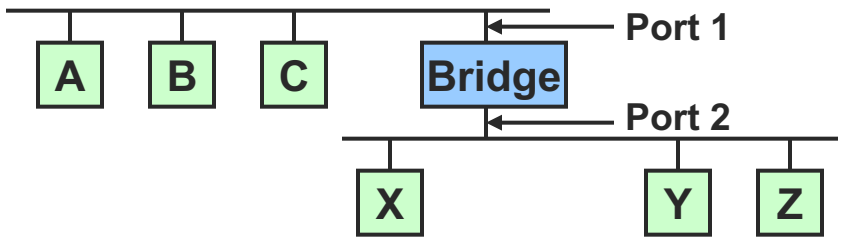

Host	Port
A	1
B	1
C	1
X	2
Y	2
Z	2

© CS 438 Staff, University of Illinois

Learning Bridges: Misses

- What about frames with unfamiliar destinations?
  - Forward the frame on all interfaces ("flooding")
  - … except for source interface
- Hopefully, this case won't happen very often
- When destination replies,
  - Switch learns that node, too

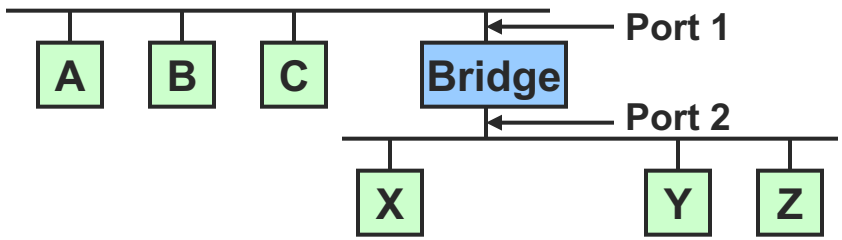

Host	Port
A	1
B	1
C	1
X	2
Y	2
Z	2

© CS 438 Staff, University of Illinois

Learning Bridges

- Examples
  - Frame for A received on port 1: do nothing
  - Frame for C received on port 2: forward to port 1
  - Frame for S received on port 2: forward to port 1

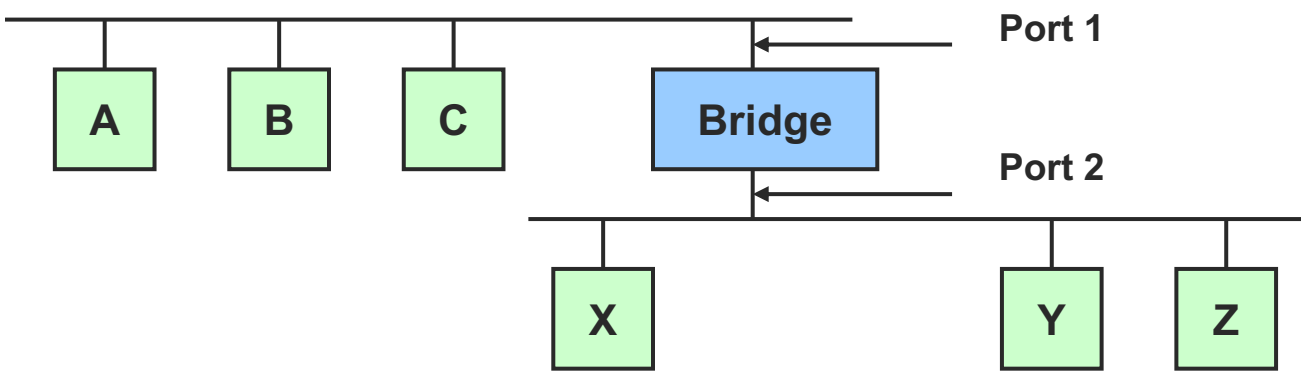

© CS 438 Staff, University of Illinois

Learning Bridges: Forwarding

- Simple algorithm

```
<receive frame>
index switch table using MAC dest address
if entry found for destination
    if dest on segment from which frame arrived
        drop frame
    else forward frame on interface indicated
else flood
```

forward on all but the interface on which the frame arrived

Problems?

© CS 438 Staff, University of Illinois

Learning Bridges

- Problem: Loops
  - If there is a loop in the extended LAN, a packet could circulate forever
    - Side question: Are loops good or bad?

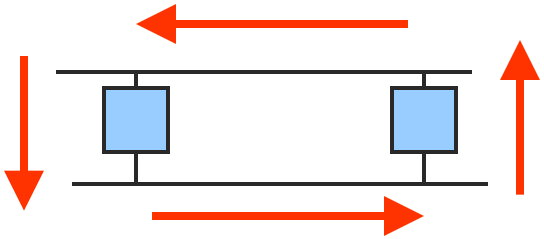

© CS 438 Staff, University of Illinois

Learning Bridges

- Solution: Spanning Tree
  - Select which bridges should actively forward
  - Create a spanning tree to eliminate unnecessary edges
  - Adds robustness
  - Complicates learning/forwarding

© CS 438 Staff, University of Illinois

Learning Bridges

- Spanning tree
  - Sub-graph that covers all vertices but has no cycles
  - Links not in the spanning tree do not forward frames

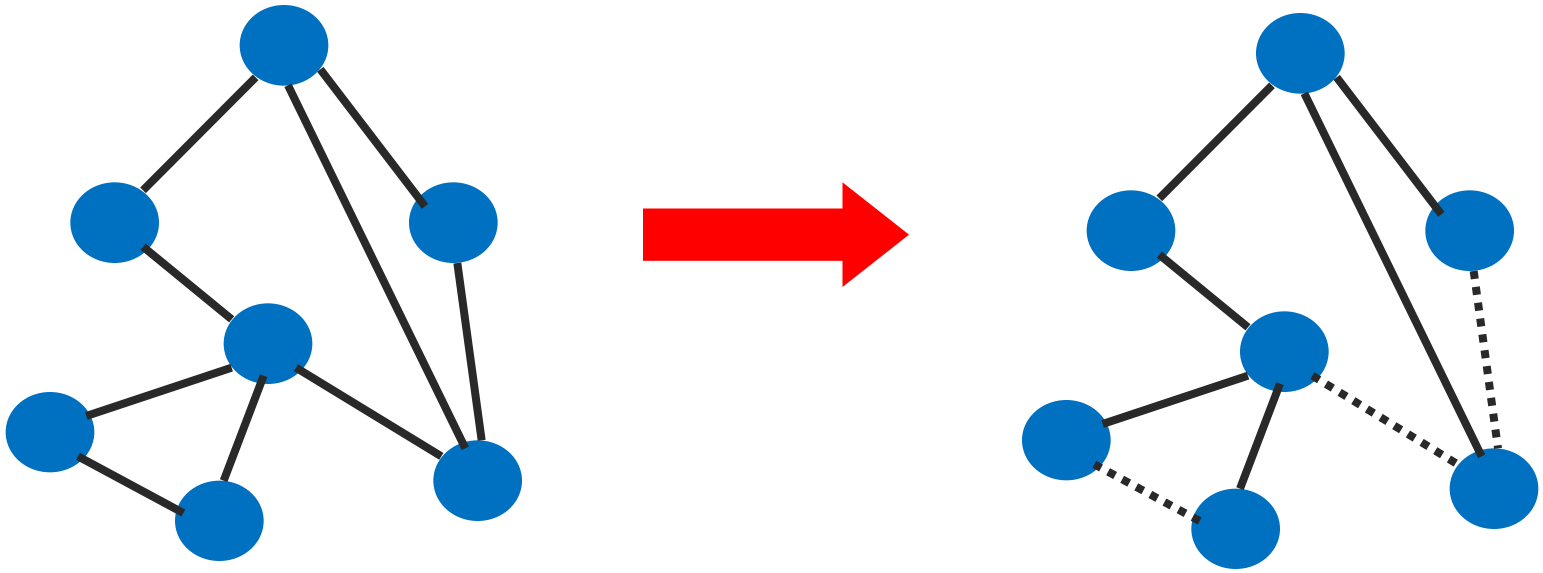

© CS 438 Staff, University of Illinois

Example Extended LAN with LOOPS

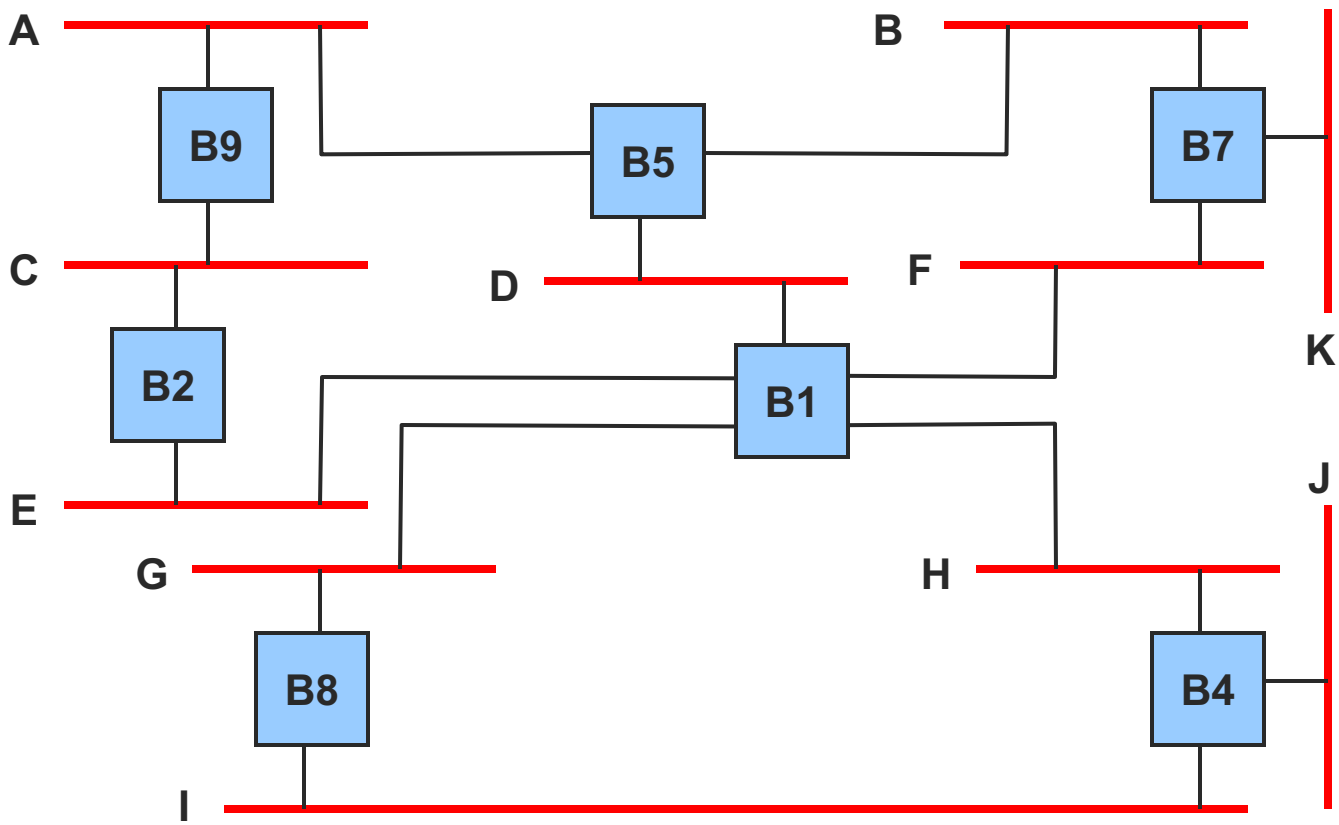

© CS 438 Staff, University of Illinois

Spanning Tree Algorithm

- View extended LAN as bipartite graph
  - LAN's are graph nodes
  - Bridges are also graph nodes
  - Ports are edges connecting LAN's to bridges
- Spanning tree required
  - Connect all LAN's
  - Can leave out bridges

© CS 438 Staff, University of Illinois

Defining a Spanning Tree

- Basic Rules
  - Bridge with the lowest ID is the **root**
  - For a given bridge
    - A port in the direction of the **root bridge** is the **root port**
  - For a given LAN
    - The bridge closest to the root (or the bridge with the lowest ID to break ties) is the **designated bridge** for a LAN
    - The corresponding port is the **designated port**
  - Bridges with no designated ports and ports that are neither a root port nor a designated port are not part of the tree

© CS 438 Staff, University of Illinois

Spanning Tree Algorithm

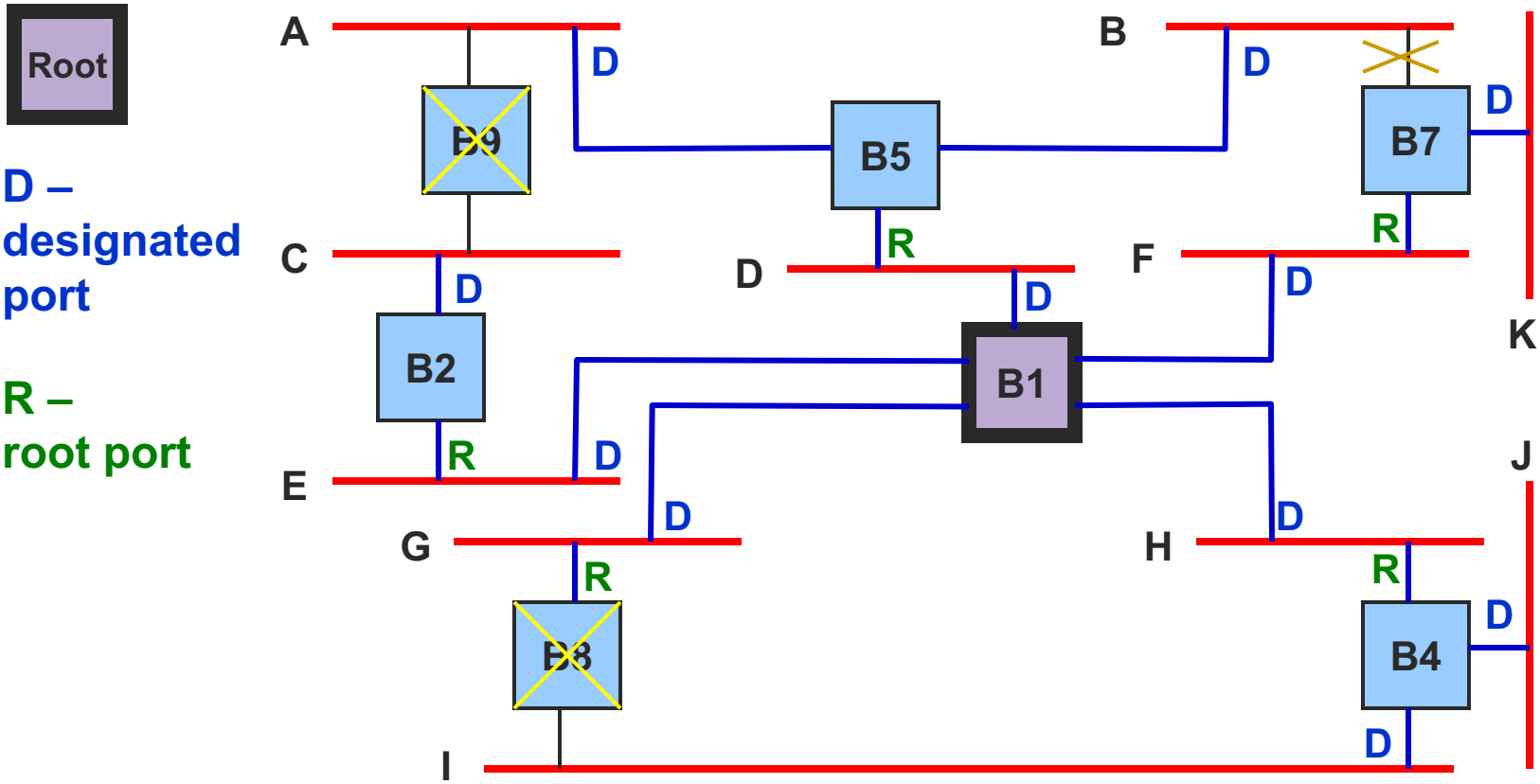

© CS 438 Staff, University of Illinois

Using a Spanning Tree: Forwarding

- Forwarding
  - Each bridge forwards frames over each LAN for which it is the designated bridge or connected by a root port
- Suppressing
  - A bridge does not forward a frame over a port if it knows that the destination is not on the other side of the port

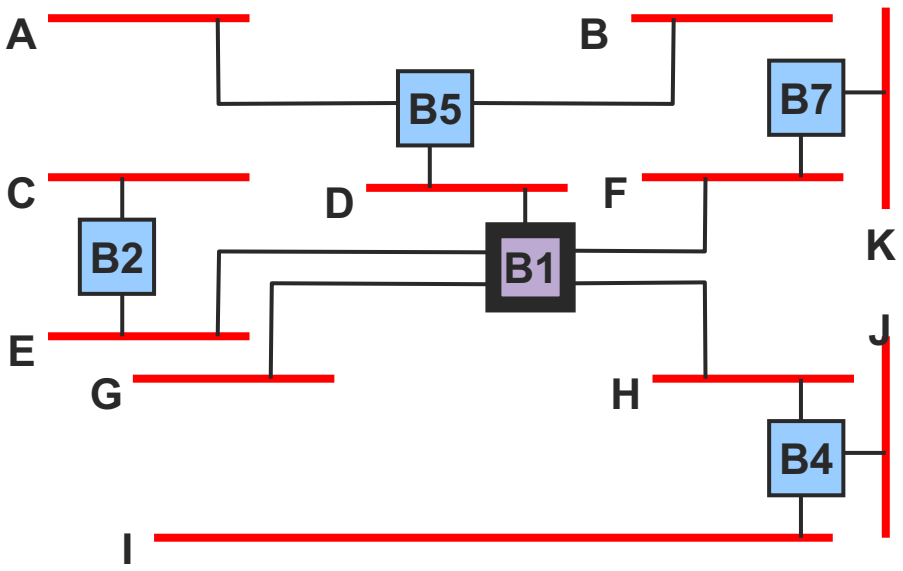

© CS 438 Staff, University of Illinois

Using a Spanning Tree: Broadcast and Multicast

- Forward all broadcast/ multicast frames
- Learn when there are no group members downstream
  - Have each member of group G send a frame with multicast address G in it to a bridge

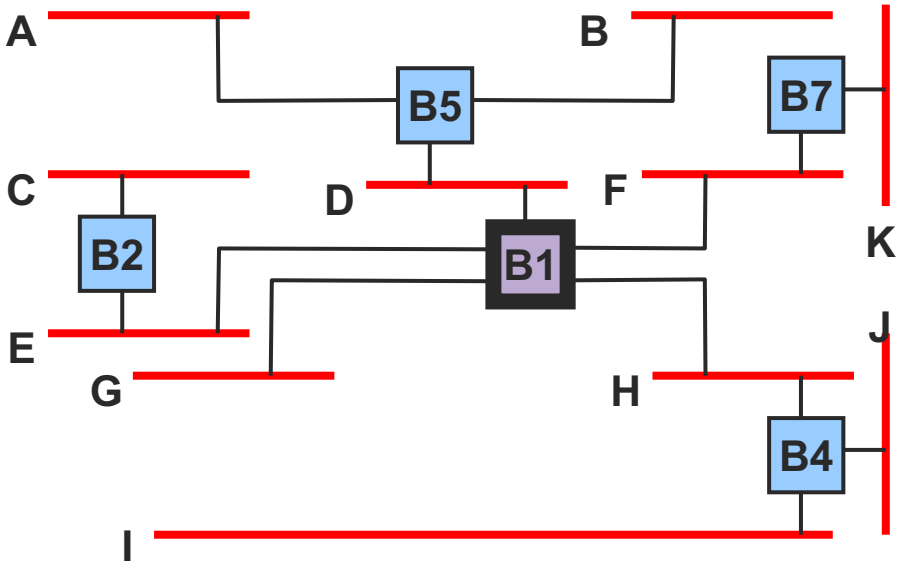

© CS 438 Staff, University of Illinois

Finding the Tree by a distributed Algorithm

- Bridges run a distributed spanning tree algorithm
  - Select when bridges should actively forward frames
- Developed by Radia Perlman at DEC
- Now IEEE 802.1 specification

© CS 438 Staff, University of Illinois

Algo-rhyme

I think that I shall never see
A graph more lovely than a tree.

A tree whose crucial property
Is loop-free connectivity

A tree which must be sure to span,
So packets can reach every LAN.

First the Root must be selected.
By ID it is elected.

Least-cost paths from Root are traced.
In the tree these paths are placed.

A mesh is made by folks like me.
Then bridges find a spanning tree.

– Radia Perlman

© CS 438 Staff, University of Illinois

Distributed Spanning Tree Algorithm

- Bridges exchange configuration messages
  - (Y,d,X)
    - Y = root node
    - d = distance to root node
    - X = originating node
- Each bridge records current best configuration message for each port
- Initially, each bridge believes it is the root
- When a bridge discovers it is not the root, stop generating messages

© CS 438 Staff, University of Illinois

Distributed Spanning Tree Algorithm

- Bridges forward configuration messages
  - Outward from root bridge
  - i.e., on all designated ports
- Bridge assumes
  - It is designated bridge for a LAN
  - Until it learns otherwise
- Steady State
  - root periodically sends configuration messages
  - A timeout is used to restart the algorithm

© CS 438 Staff, University of Illinois

Spanning Tree Algorithm

- Example at bridge B3

1. B9 receives (B2, 0, B2)
2. Since 2 < 9, B9 accepts B2 as root
3. B9 adds 1 to the distance advertised by B2 and sends (B2, 1, B9)
4. B2 accepts B1 as root and sends (B1, 1, B2)
5. B5 accepts B1 as root and sends (B1, 1, B5)
6. B9 accepts B1 as root and stops forwarding

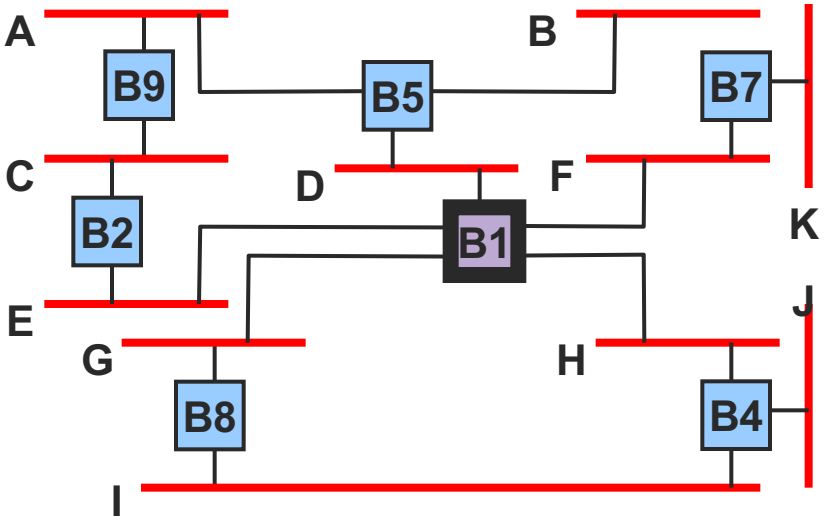

© CS 438 Staff, University of Illinois

Robust Spanning Tree Algorithm

- Algorithm must react to failures
  - Failure of the root node
    - Must elect new root, with the next lowest identifier
  - Failure of other switches and links
    - Need to recompute some part of the spanning tree
- Root switch continues sending messages
  - Periodically re-announcing itself as the root (1, 0, 1)
  - Other switches continue forwarding messages
- Detecting failures through timeout (soft state)
  - Switch waits to hear from others
  - Eventually times out and claims to be the root

© CS 438 Staff, University of Illinois

Bridges: Limitations

- Does not scale
  - Spanning tree algorithm scales linearly
  - Broadcast does not scale
- Virtual LANs (VLAN)
  - An extended LAN that is partitioned into several networks
  - Each network appears separate
  - Limits effect of broadcast
  - Simple to change virtual topology

© CS 438 Staff, University of Illinois

Bridges: Limitations

- Does not accommodate heterogeneity
  - Networks must have the same address format
    - e.g. Ethernet-to-Ethernet
- Caution
  - Beware of transparency
    - May break assumptions of the point-to-point protocols
      - Frames may get dropped
      - Variable latency
      - Reordering
    - Bridges happen!

© CS 438 Staff, University of Illinois

Bridging: how good is it?

- Advantages of bridges over routers
  - Plug-and-play
    - Routers could be too in principle, but typically are not
  - Fast filtering and forwarding of frames

- Disadvantages of switches over routers
  - Topology restricted to a spanning tree
    - Long paths, congestion
  - Large networks require large tables
  - Broadcast storms can cause the network to collapse
  - Can't accommodate non-Ethernet segments (why?)

© CS 438 Staff, University of Illinois