CS 173: Discrete Structures, Spring 2013
Homework 10

1. (12 points)

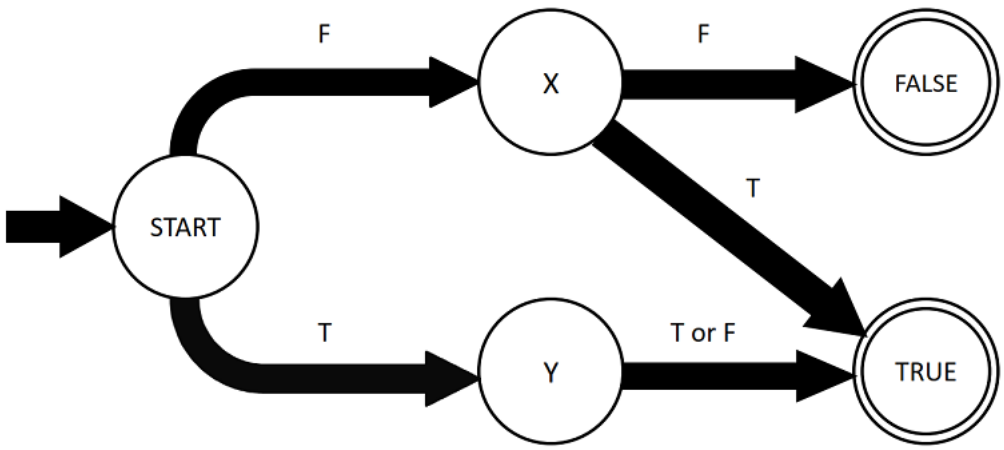

(a) (6 points) Maxwell Smart was told to design a machine that accepts strings $x_1x_2...x_n$ for $x_i \in \{F, T\}$ with $(((x_1 \vee x_2) \vee x_3) \vee ...) \vee x_n$ true. However, the design he produced (above) only reads in strings containing exactly two characters. Create a better finite-state machine that can read in an arbitrary number of characters. Your machine should have only three states. You can use the figure below to start with.

(b) (6 points) Describe a similar finite-state machine, which only accepts strings, $x_1x_2x_3...x_n$ for $x_i \in \{F, T\}$, with $(((x_1 \oplus x_2) \oplus x_3) \oplus ...) \oplus x_n$ true.

Recall that $a \oplus b$ is given by

a	b	a ⊕ b
F	F	F
F	T	T
T	F	T
T	T	F

.

2. (12 points, 2 bonus) Suppose a player repeatedly flips a coin, which has an equal chance of being "heads" or "tails". If heads, the player gets \$1, if tails, the player gets \$2. The player must stop when the total is a non-zero multiple of \$5.

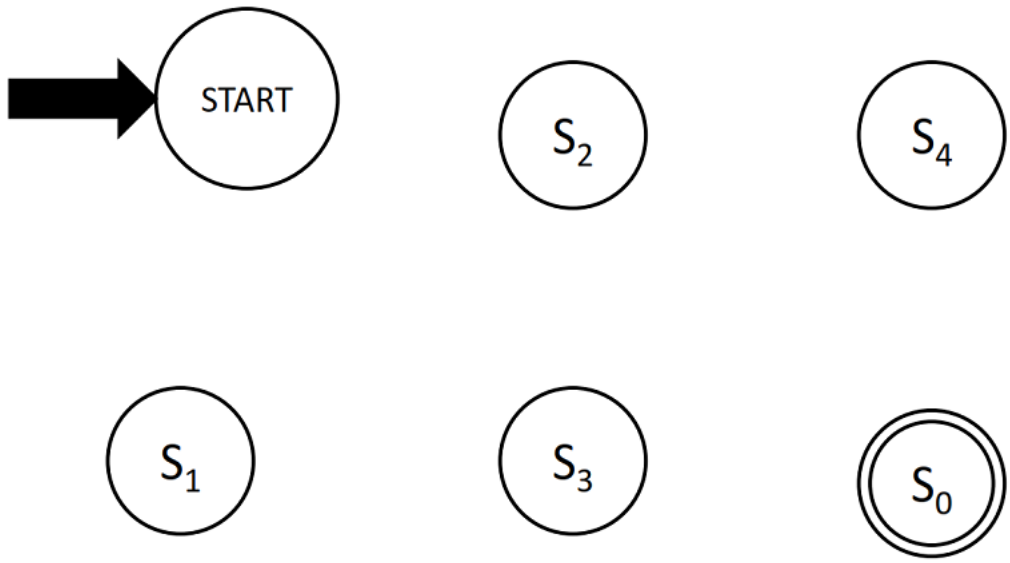

(a) (6 points) Finish the state diagram for this game, starting from the figure above. You'll need to add in the transitions, which should be labeled "H" (heads) or "T" (tails). Here, S_i represents the state of the player having received some amount of money congruent to i $(mod\ 5)$.

(b) (2 points) What are all of the unique sequences such that the game ends in exactly five flips?

Your sequence should be a series of H's and T's. For example, $HHTTT$ indicates two head flips, followed by three tail flips.

(c) (2 points) How many sequences go from start to S_0 without containing the S_4, S_1 subsequence? For example, $START, S_1, S_3, S_4, S_0$ is one such sequence.

(d) (2 points) How many sequences go from start to S_0 containing exactly one S_4, S_1 subsequence? For example, $START, S_1, S_3, S_4, S_1, S_3, S_0$ is one such sequence.

(e) (bonus 2 points) If the player pays \$7 to play each game, and plays many games, should the player expect to make money or lose money? Briefly justify or explain how you got your answer. Provide an approximate (or exact) value for the expected payout. You could solve this by explicitly computing or by writing a program to estimate the expected payout through many simulations.

Note that the expected payout is $5 \cdot Pr(5) + 10 \cdot Pr(10) + 10 \cdot Pr(15) + ...$, where $Pr(x)$ is the probability of ending the game at exactly x dollars.